U.S. Tsubaki Power Transmission, LLC
301 E. Marquardt Dr.
Wheeling, IL 60090

Phone: 847.459.9500 or 800.323.7790
Fax: 847.459.9515
Email: sales@ustsubaki.com

Website: www.ustsubaki.com

ITEM # MZEU55, MZEU-55 MM BORE CAM CLUTCH

MZEU Series is a general purpose Cam Clutch suitable for a wide variety of applications. A selection of add-on flanges and torque arms are available enabling this Cam Clutch to easily fit where custom designed products were previously required. MZEU12 to MZEU80 are pre-greased, requiring no lubrication. MZEU90 to MZEU150 require oil lubrication. Contact Tsubaki for indexing applications above 50 cycles per minute.



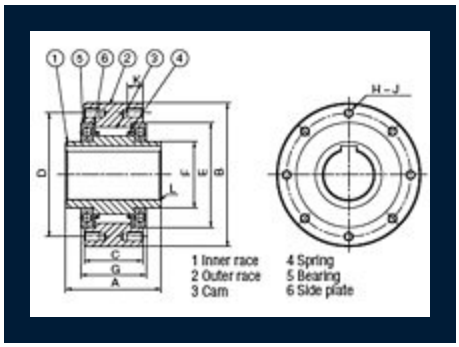

Specifications

Bore Size	2.165 in 55.00 mm
Torque Capacity	1770.1 lb·ft 2400.0 N·m
Max. Overrunning Shaft	1300 rpm
Max. Overrunning Outer Race	250 rpm
Drag Torque	0.649 lb·ft 0.88 N·m

Inner Race Keyway	16 x 4.3 mm
A (Overall Width)	4.094 in 104.00 mm
B (Overall Height)	6.299 in 160.00 mm
C (Outer Race Width)	2.598 in 66.00 mm
D (Bolt Circle Diameter)	5.433 in 138.00 mm
E (Outer Race I.D.)	4.528 in 115.00 mm
F (Inner Race O.D.)	2.953 in 75.00 mm
G (Cam Cage Width)	2.835 in 72.00 mm
J (Quantity)	8
H (Bolt Circle Tap)	M10
K (Thread Depth)	0.630 in 16.00 mm
L (Chamfer)	0.059 in 1.50 mm
Weight	20.900 lb 9.500 kg