U.S. Tsubaki Power Transmission, LLC
301 E. Marquardt Dr.
Wheeling, IL 60090

Phone: 847.459.9500 or 800.323.7790
Fax: 847.459.9515
Email: sales@ustsubaki.com

Website: www.ustsubaki.com

ITEM # MIUS500-P, MIUS500-7/8" BORE CAM CLUTCH

MIUS Series Cam Clutch units are designed for indexing applications. In this mode of operation, reciprocating motion applied to the driving race of the clutch is transformed into uni-directional intermittent motion, at the driven race. The clutch drives in the forward stroke (index) and overruns on the return stroke. In addition to torque capacity, consider the number of indexing cycles per minute. This series ships pre-lubricated with oil.



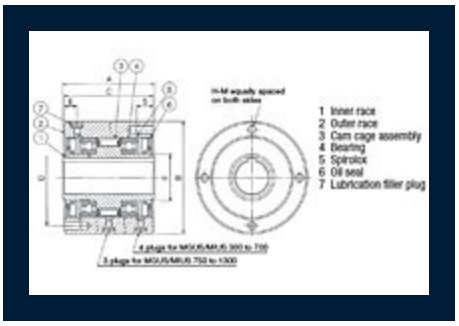

Specifications

Bore Size	0.875 in 22.23 mm
Bore Keyseat	3/16 x 3/32"
Torque Capacity	1194.8 lb·ft 1620.0 N·m
Max. Overrunning Inner Race	50 rpm
Max. Indexing	300 cpm

Drag Torque	0.502 lb·ft 0.68 N·m
A (Overall Width)	3.500 in 88.90 mm
B (Overall Diameter)	4.250/4.248 in 107.95/107.90 mm
C (Outer Race Width)	3.375 in 85.85 mm
D (Pitch Circle Diameter)	3.625 in 92.08 mm
E (Filler Plug Location)	0.484 in 12.30 mm
F (Inner Race O.D.)	1.748 in 44.40 mm
S (Thread Depth)	0.630 in 16.00 mm
H (No. of Tapped Holes)	4
M (Thread)	5/16-24
Oil Filler Plug	M6 x P1.0
Oil Capacity	3.40 oz 100 mL
Weight	11.023 lb 5.000 kg