VS-118

SPEAKMAN®

Two-Way Shower Diverter

FEATURES:

- Plastic body construction with Brass swivel nut
- 1/2 in. NPS male outlet and 1/2 in. NPS female inlet
- Inlet contains rubber seal washer with mesh screen
- Built-in check valve

STOCK FINISH:

PC BN MB

WARRANTY:

Visit www.speakman.com for full product warranty information

- 1 Year Limited Warranty (commercial)
- 1 Year Limited Warranty (residential)



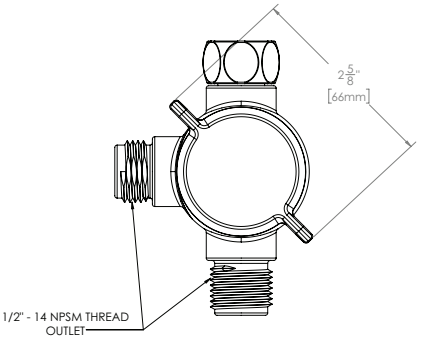

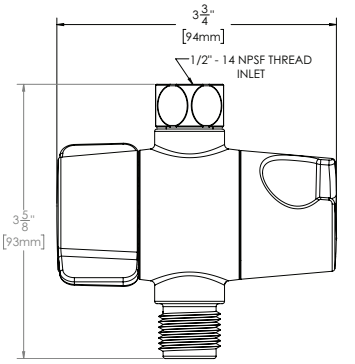

All dimensions are in inches (millimeters) unless otherwise specified and are subject to change without notice.

Architect/Engineer Approval Space:

P: 800-537-2107
F: 800-977-2747
W: WWW.SPEAKMAN.COM
R: 02-FEBRUARY 2019