SPEAKMAN® SE-622

Stainless Steel Combination Shower with Rectangular Eyewash Bowl



EYE WASH FEATURES: (SE-505)

- (2) aerated yellow nylon spray outlets
- Stainless steel bowl
- ½ in. NPT female stainless steel full flow stay-open ball valve
- Stainless steel trigger bar activator
- 3.0 gpm @ 30 psi
- Universal emergency sign included

SHOWER FEATURES:

- 8 in. diameter stainless steel showerhead
- Internal 20 gpm flow control
- 1" NPT female stainless steel full flow stay-open ball valve
- Stainless steel triangular pull rod
- 1 ¼" NPT female inlet & waste
- 1 ½ in. stainless steel, 18 guage tubing
- Stainless steel floor flange
- 20 gpm @ 30 psi

FINISHES:

Stainless Steel

COMPLIANCE:

- Certified to ANSI/ISEA Z358.1

OPTIONS:

Add suffix to model #

• Anti-freeze protection valve	❑ -FPV
• Hand & foot operation	❑ -HFO
• Hand-held spray	❑ -HS
• Self-closing shower valve with chain & ring	❑ -SCSV
• Anti-scald protection valve	❑ -SPV

WARRANTY:

- 3 year limited

Architect/Engineer Approval Space:

SPEAKMAN
400 ANCHOR MILL ROAD
NEW CASTLE, DE 19720

P: 800-537-2107
F: 800-977-2747
W: WWW.SPEAKMAN.COM
R: MARCH 2017

DIMENSIONS:

NOTE: 1. All dimensions are in inches (millimeters) unless otherwise specified and are subject to change without notice.

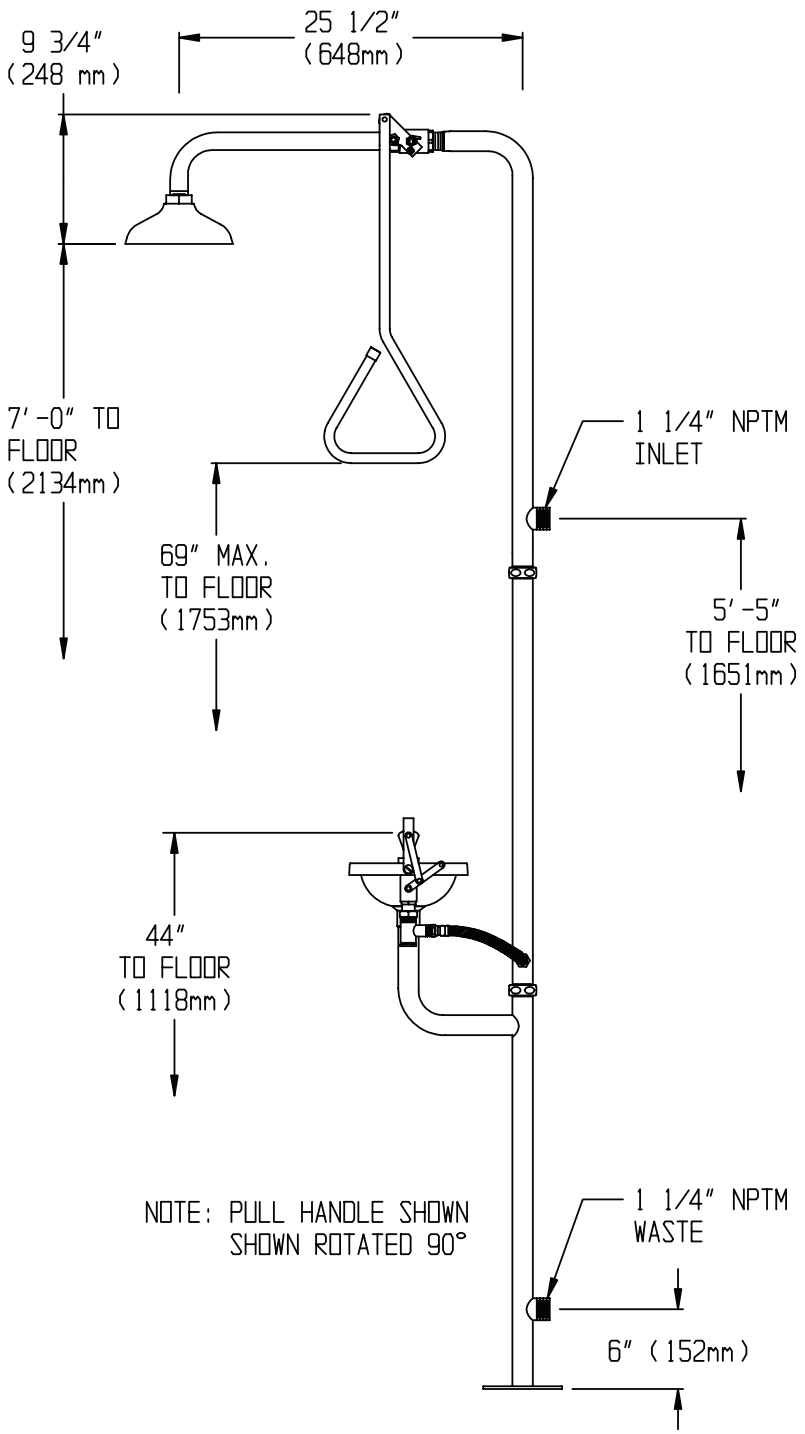

Architect/Engineer Approval Space:

SPEAKMAN
400 ANCHOR MILL ROAD
NEW CASTLE, DE 19720

P: 800-537-2107
F: 800-977-2747
W: WWW.SPEAKMAN.COM
R: MARCH 2017