SPEAKMAN® SEF-1850-8

Eyesaver® Single Post 8 in. Laboratory Faucet with Integrated Eyewash

The Speakman SEF-1850-8 is a NSF 61 compliant single post laboratory faucet with an integrated ANSI compliant aerated eyewash. Dedicated water ways allow the faucet and eyewash to work independently of each other.



EYEWASH FEATURES:

- Lift handle activator
- Dedicated water channel for eyewash
- Aerated chrome plated spray outlets with flip-top dust caps
- 2.0 gpm (7.57 L/min) flow rate at 30 PSI
- Tepid water ready
- ⅜ in. male compression connection

FAUCET FEATURES:

- Lead-free brass construction
- 8 In. spout length
- ¼ turn ceramic cartridges
- Cross handles with color-coded indexes
- Swivel or rigid spout up to 100 degrees
- Single post installation
- 1.5 gpm (5.7 L/min) flow rate
- ⅜ in. male compression connections for hot & cold inlets

COMPLIANCE:

- ASME A112.18.1/CSA B125 compliant
- NSF 61 (excludes ST option)
- NSF 372 compliant (excludes ST option)
- ANSI/ISEA Z358.1 compliant

OPTIONS: Add suffix to model

• 4 in. wrist blade handles	❑ -4WH
• 8 in. gooseneck spout	❑- 8
• Vandal resistant 0.5 gpm flow control	❑ -BO
• Laminar flow outlet 1.5 gpm	❑ -LF
• Non-aerated eyewash outlets	❑ -NA
• Serrated tip with vacuum breaker (not NSF 372 or NSF 61 compliant)	❑ -ST
• SE-370 Thermostatic mixing valve	❑ -TW

WARRANTY:

- 3 year limited

Patented design

Architect/Engineer Approval Space:

SPEAKMAN
400 ANCHOR MILL ROAD
NEW CASTLE, DE 19720

P: 800-537-2107
F: 800-977-2747
W: WWW.SPEAKMAN.COM
R: OCTOBER 2016

DIMENSIONS:

NOTE: 1. All dimensions are in inches (millimeters) unless otherwise specified and are subject to change without notice.

FRONT VIEW

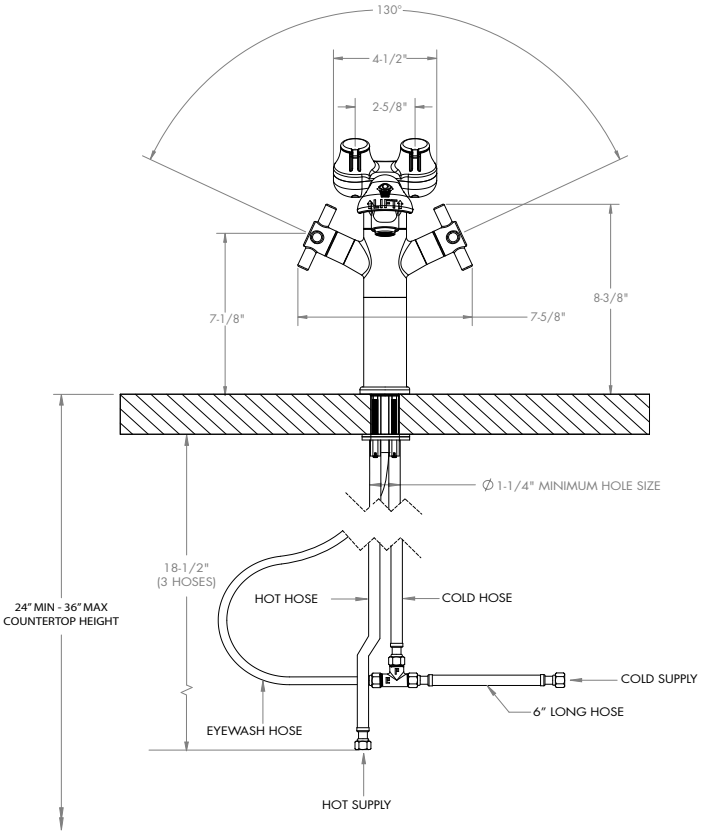

SIDE VIEW (LESS HOSES)

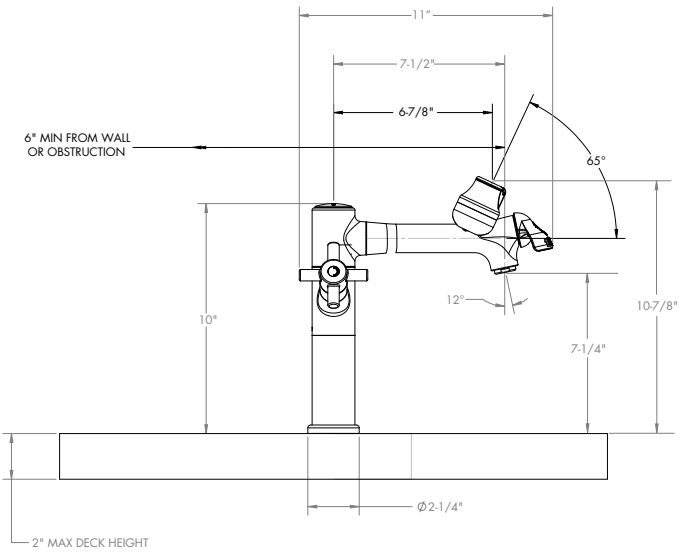

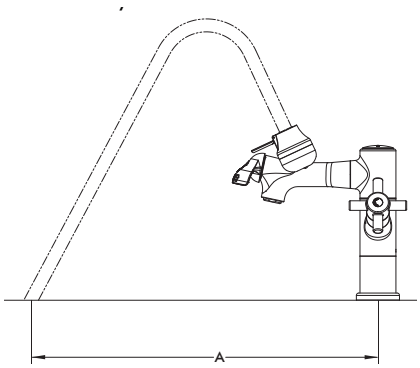

SEF-1850-8 Spray Plume Length and Flow

Flowing Pressure	30 psi	40 psi	50 psi	60 psi	70 psi	80 psi
	2.07 Bar	2.76 Bar	3.45 Bar	4.14 Bar	4.83 Bar	5.52 Bar
Flow Rate	2.15 gpm	2.24 gpm	2.47 gpm	2.71 gpm	2.95 gpm	3.13 gpm
	8.1 L/min	8.5 L/min	9.3 L/min	10.3 L/min	11.2 L/min	11.8 L/min
Eyewash Distance Plume "A"	17"	18"	20"	23"	27"	29"
	43.2 cm	45.7 cm	50.8 cm	58.4 cm	68.6 cm	73.7 cm

Architect/Engineer Approval Space:

SPEAKMAN
400 ANCHOR MILL ROAD
NEW CASTLE, DE 19720

P: 800-537-2107
F: 800-977-2747
W: WWW.SPEAKMAN.COM
R: OCTOBER 2016