# S-3011

SPEAKMAN®

## Chelsea™ Shower Head

## MODELS:

- S-3011: 2.5 GPM (9.5 L/min) flow rate
- S-3011-E2: 2.0 GPM (7.6 L/min) flow rate
- S-3011-E175: 1.75 GPM (6.6 L/min) flow rate

## FEATURES:

- 5 plungers with 45 sprays, 12 massage jets, 3 spray patterns
- Patented Anystream® plungers resist scale build-up
- Spray adjusting faceplate
- Plastic body construction, with brass ball nut
- 1/2" -14 NPTF female inlet
- Corrosion resistant finishes
- Coordinates with Chelsea Collection




## STOCK FINISHES:



PC BN

## SPECIALTY FINISHES:



BBZ MB ORB PB PN

## STANDARDS:

- ASME A112.18.1/CSA B125.1 certified
- CEC (CA Energy Commission) certified, 1.75 GPM only
- WaterSense certified, 2.0 & 1.75 GPM only

## WARRANTY:

*Visit www.speakman.com for full product warranty information*

- Limited Lifetime Warranty (consumer)
- 1 Year Limited Warranty (commercial)

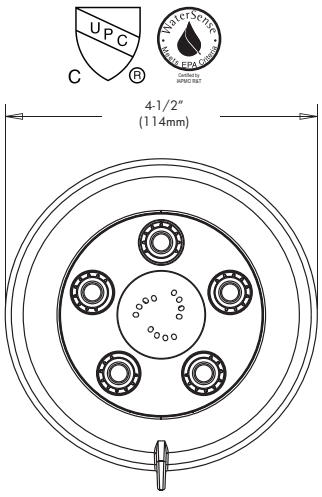


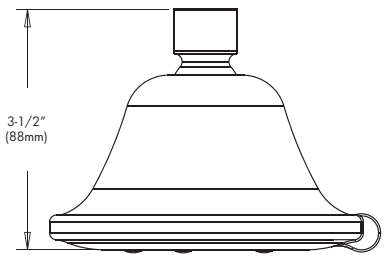


All dimensions are in inches (millimeters) unless otherwise specified and are subject to change without notice.

Architect/Engineer Approval Space:

SPEAKMAN
400 ANCHOR MILL ROAD
NEW CASTLE, DE 19720

**P:** 800-537-2107
**F:** 800-977-2747
**W:** WWW.SPEAKMAN.COM
**R:** 01-APRIL 2018