CPT-10400-P

SPEAKMAN®

Chelsea™ Pressure Balance Diverter Valve Trim

FEATURES:

- Metal lever handles
- Plastic trim plate
- Includes mounting plate and hardware

VALVE OPTIONS:

- CPV-PB-DV: Diverter Pressure Balance Valve Sweat & Thread Connections
- CPV-PB-DV-PXC: Diverter Pressure Balance Valve PEX F1807 Crimp Inlet Connections
- CPV-PB-DV-PXE: Diverter Pressure Balance Valve PEX F1960 Cold-Expansion Inlet Connections
- CPV-T-DV: Diverter Thermostatic Valve Sweat & Thread Connections
- CPV-T-DV-PXC: Diverter Thermostatic Valve PEX F1807 Crimp Inlet Connections
- CPV-T-DV-PXE: Diverter Thermostatic Valve PEX F1960 Cold-Expansion Inlet Connections



STOCK FINISH:

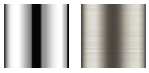

PC BN

STANDARDS:

- ASME A112.18.1/CSA B125.1 certified
- ADA compliant

WARRANTY:

Visit www.speakman.com for full product warranty information

- Limited Lifetime Warranty (consumer)
- 5 Year Limited Warranty (commercial)

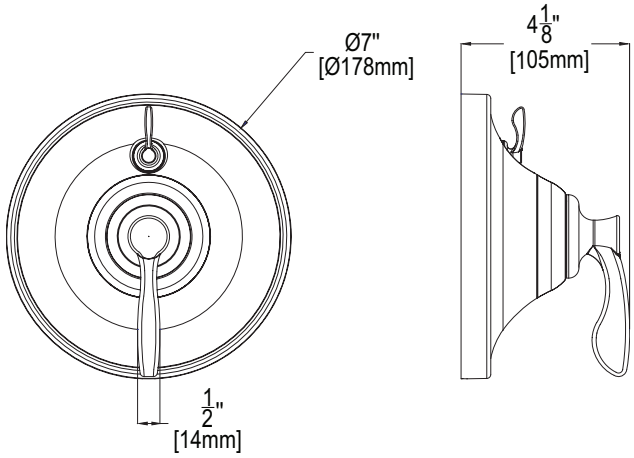

All dimensions are in inches (millimeters) unless otherwise specified and are subject to change without notice.

Architect/Engineer Approval Space:

P: 800-537-2107
F: 800-977-2747
W: WWW.SPEAKMAN.COM
R: 02-NOVEMBER 2018