SE-227

SPEAKMAN®

Lifesaver® Emergency Shower

MODELS:

- SE-227: 8” Plastic Emergency Shower
- SE-227-SS: 8” Stainless Steel Shower with all Stainless Steel Components

FEATURES:

- 8” high peformance emergency shower head with integral flow control
- High visiblity yellow aluminum pull rod activator
- 1” NPT female brass, chrome-plated, full flow stay-open ball valve
- 1” NPT female inlet
- Horizontal Supply
- 20 GPM (75.71 L/min) @ 30 PSI flow rate
- Universal emergency sign included

OPTIONS:

- ADA: Extra long pull rod
- FPV: Freeze protection valve
- SCSV: Self-closing shower valve with chain & ring
- SPV: Scald protection valve
- SSBV: 1” Stainless steel ball valve
- SSH: Stainless steel shower head
- SPR: Stainless steel pull rod

STANDARDS:

- ANSI/ISEA Z358.1 certified

WARRANTY:

Visit www.speakman.com for full product warranty information

- 3 Year Limited Warranty (commercial)



SE-227

SE-227-SS

Information continues on next page

All dimensions are in inches (millimeters) unless otherwise specified and are subject to change without notice.

Architect/Engineer Approval Space:

P: 800-537-2107
F: 800-977-2747
W: WWW.SPEAKMAN.COM
R: 01-AUGUST 2018

Lifesaver® Emergency Shower

SE-227

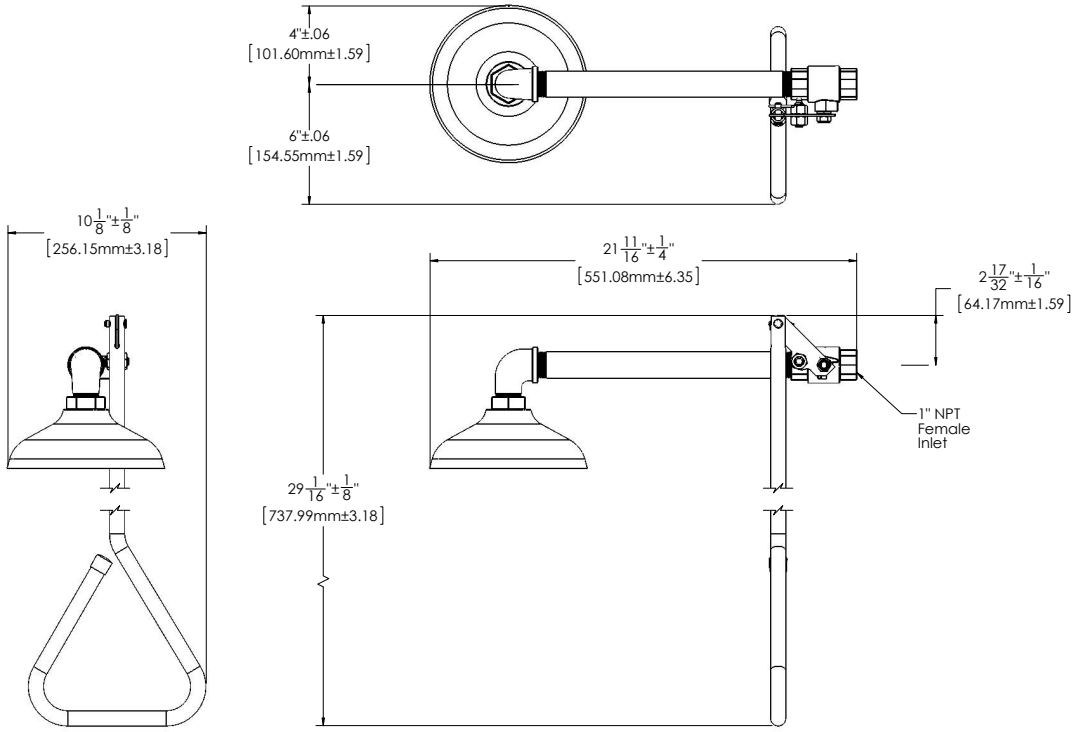

SE-227-SS

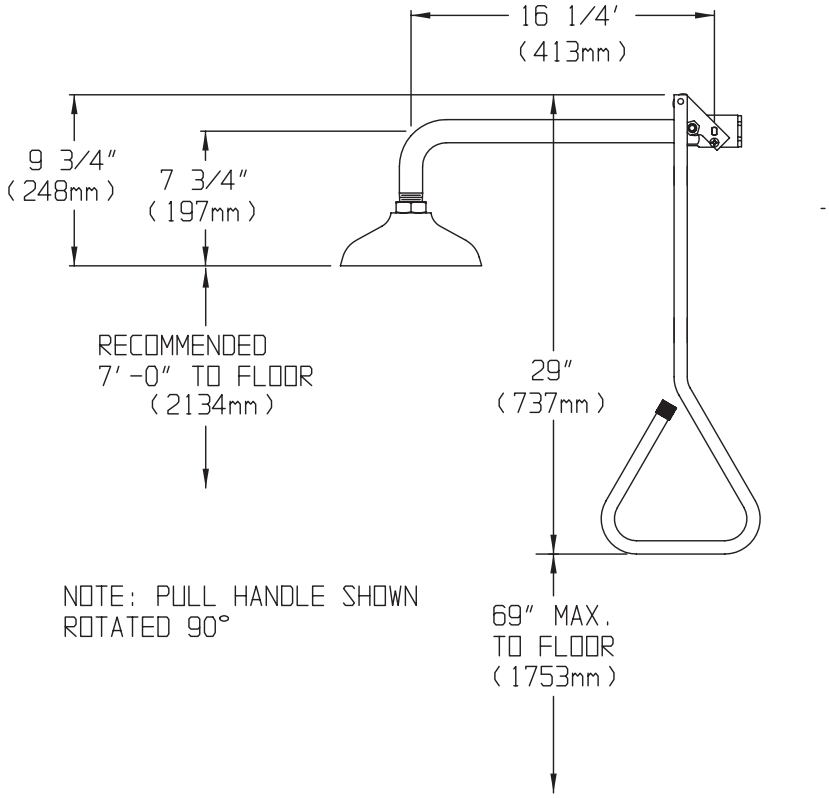

All dimensions are in inches (millimeters) unless otherwise specified and are subject to change without notice.

Architect/Engineer Approval Space:

P: 800-537-2107
F: 800-977-2747
W: WWW.SPEAKMAN.COM
R: 01-AUGUST 2018