# SPEAKMAN® SM-24400-P

Kubos™ Pressure Balance Valve with Diverter and Trim

## FEATURES

### VALVE:

- Anti-scald protection
- Pressure balancing ceramic cartridge
- Adjustable temperature limit stop
- Integral stops
- Diverter handle allows for transfer between two water outlets
- 1/2" NPT female tub outlet
- 1/2" sweat shower outlet
- 1/2" sweat inlets
- Includes rough-in trim plate




### TRIM:

- Modern square style
- Mounting plate with seal
- Metal handles
- Durable plastic template

### FINISH:

PC BN

### COMPLIANCE:

- ASME A112.18.1/CSA B125.1 certified
- Meets ASSE 1016

### WARRANTY:

- 1 Year Limited

Architect/Engineer Approval Space:

SPEAKMAN
400 ANCHOR MILL ROAD
NEW CASTLE, DE 19720

**P:** 800-537-2107
**F:** 800-977-2747
**W:** WWW.SPEAKMAN.COM
**R:** JANUARY 2018



Management Systems Registered to ISO 9001

## DIMENSIONS:

NOTE: 1. All dimensions are in inches (millimeters) unless otherwise specified and are subject to change without notice. 2. Unless otherwise specified, all inlets and outlets are 1/2" female copper sweat. 3. For ADA mounting locations, consult ADAAG, ANSI A117.1, or static regulations. Contractor pack valves & trim kits available.

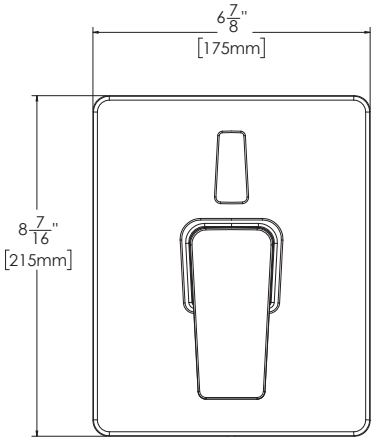


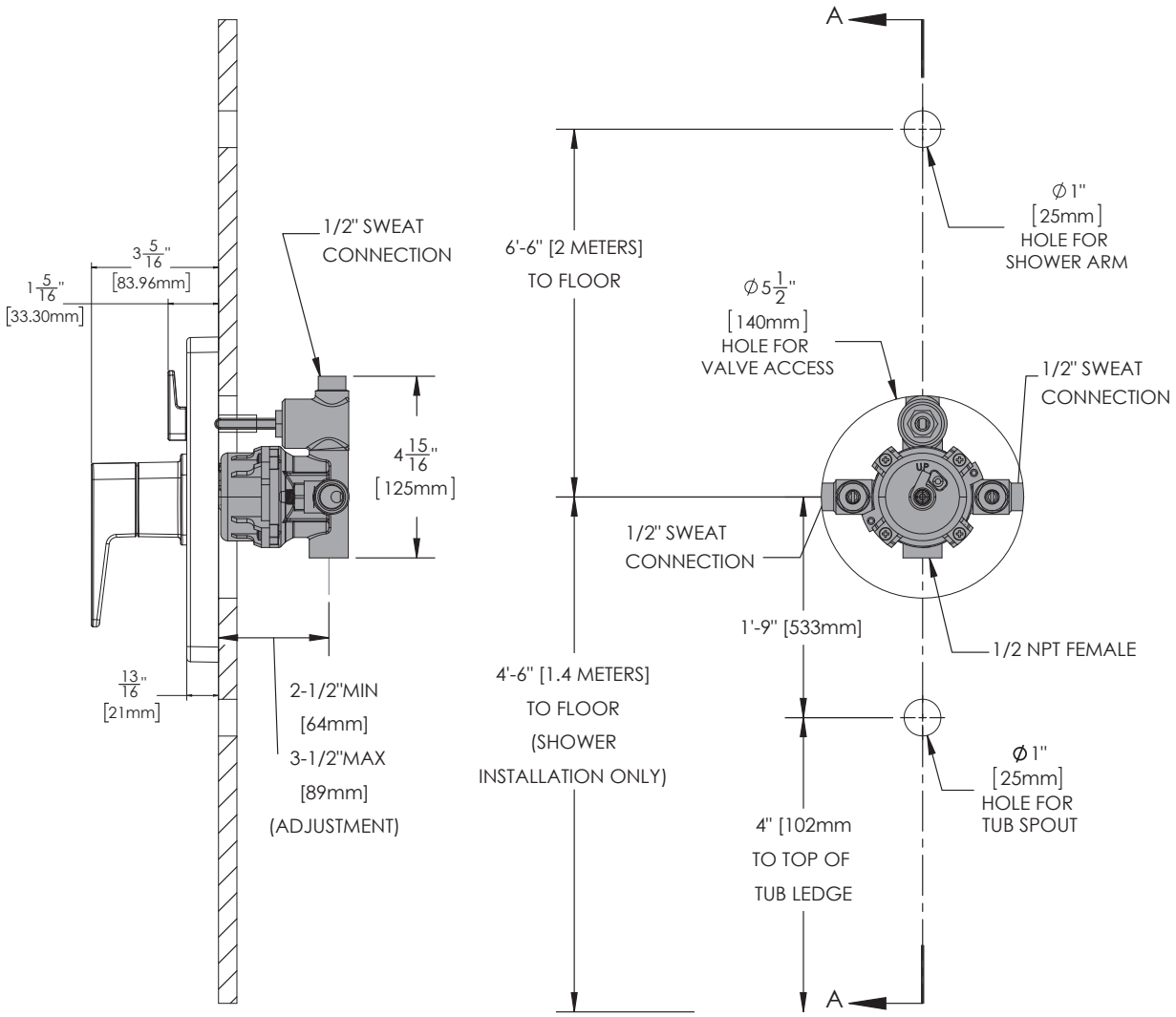


Architect/Engineer Approval Space:

SPEAKMAN
400 ANCHOR MILL ROAD
NEW CASTLE, DE 19720

**P:** 800-537-2107
**F:** 800-977-2747
**W:** WWW.SPEAKMAN.COM
**R:** JANUARY 2018