SPEAKMAN® SEF-9000

Eyesaver® Service Sink Faucet with Eyewash/Drench Hose



EYEWASH FEATURES:

- Eyewash is connected to Speakman SC-5811-RCP service sink faucet's cold water integral stop port supply
- 6 ft. stainless steel supply hose
- Activated by squeeze valve with automatic stay open device
- (2) yellow plastic spray heads with flip top dust caps
- 3.06 gpm @ 30 psi performance (eyewash only)
- 2.66 gpm @ 30 psi (with sink on)
- Integral vacuum breaker and check valve

FAUCET FEATURES:

- ½ in. NPT female inlets supply
- Vandal resistant four-arm handles with color coded indexes
- Perfect® valves with ¼ turn ceramic cartridges
- 4 gpm (min) @ 20 psi
- Cast brass nozzle with ¾ in. hose thread, pail hook and top brace outlet
- Integral vacuum breaker

COMPLIANCE:

- ASME A112.18.1/CSA B125 certified (service sink faucet)
- ANSI/ISEA Z358.1 certified (eyewash)
- ASSE -1001 certified (service sink & faucet)

OPTIONS: Add suffix to model

• 4 in. wrist blade handles for service sink	❑ -4WH
• 5 ft. hose with hook for service sink	❑ -5H
• Check valves in swivel assembly for service sink	❑ -CK
• Addition of SE-370 thermostatic mixing valve for eyewash	❑ -TW

WARRANTY:

- 3 year limited

Architect/Engineer Approval Space:

SPEAKMAN
400 ANCHOR MILL ROAD
NEW CASTLE, DE 19720

P: 800-537-2107
F: 800-977-2747
W: WWW.SPEAKMAN.COM
R: JULY 2017

DIMENSIONS:

NOTE: 1. Inlets are 1/2" NPT female. 2. All dimensions are in inches (millimeters) unless otherwise specified and are subject to change without notice. 3. The SEF-9200 EyesaverTM service sink unit and the SC-5811-RCP service sink fitting can be purchased together as a SEF-9000 EyesaverTM service sink fitting.

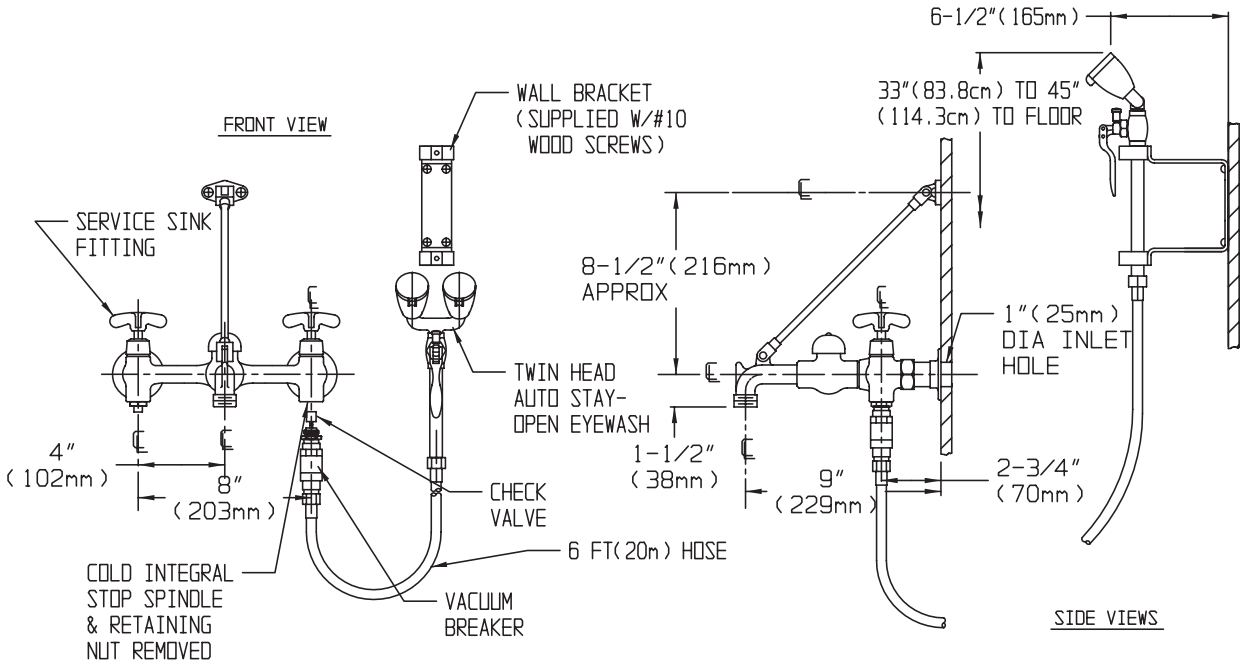

Architect/Engineer Approval Space:

SPEAKMAN
400 ANCHOR MILL ROAD
NEW CASTLE, DE 19720

P: 800-537-2107
F: 800-977-2747
W: WWW.SPEAKMAN.COM
R: JULY 2017

SPEAKMAN® SEF-9000-FM

Eyesaver® Service Sink Faucet with Fixed Mount Eyewash



EYEWASH FEATURES:

- Eyewash is connected to Speakman SC-5811-RCP service sink faucet's cold water integral stop port with stainless steel supply hose
- 6 ft. stainless steel supply hose
- Activated by squeeze valve with automatic stay open device
- (2) yellow plastic spray heads with flip top dust caps
- 3.06 gpm @ 30 psi performance (eyewash only)
- 2.66 gpm @ 30 psi (with sink on)
- Integral check valve
- Eyewash is permanently attached to wall mounting bracket

FAUCET FEATURES:

- ½ in. NPT female inlets supply
- Vandal resistant four-arm handles with color coded indexes
- Perfect® valves with ¼ turn ceramic cartridges
- 4 gpm (min) @ 20 psi
- Cast brass nozzle with ¾ in. hose thread, pail hook and top brace outlet
- Integral vacuum breaker

COMPLIANCE:

- ASME A112.18.1/CSA B125 certified (service sink faucet)
- ANSI/ISEA Z358.1 certified (eyewash)
- ASSE -1001 certified (service sink & faucet)

OPTIONS: Add suffix to model

- 4 in. wrist blade handles for service sink ❑ -4WH
- 5 ft. hose with hook for service sink ❑ -5H
- Check valves in swivel assembly for service sink ❑ -CK
- Addition of SE-370 thermostatic mixing valve for eyewash ❑ -TW

WARRANTY:

- 3 year limited

Architect/Engineer Approval Space:

SPEAKMAN
400 ANCHOR MILL ROAD
NEW CASTLE, DE 19720

P: 800-537-2107
F: 800-977-2747
W: WWW.SPEAKMAN.COM
R: JULY 2017

DIMENSIONS:

NOTE: 1. Inlets are 1/2" NPT female. 2. All dimensions are in inches (millimeters) unless otherwise specified and are subject to change without notice. 3. The SEF-9200 EyesaverTM service sink unit and the SC-5811-RCP service sink fitting can be purchased together as a SEF-9000 EyesaverTM service sink fitting.

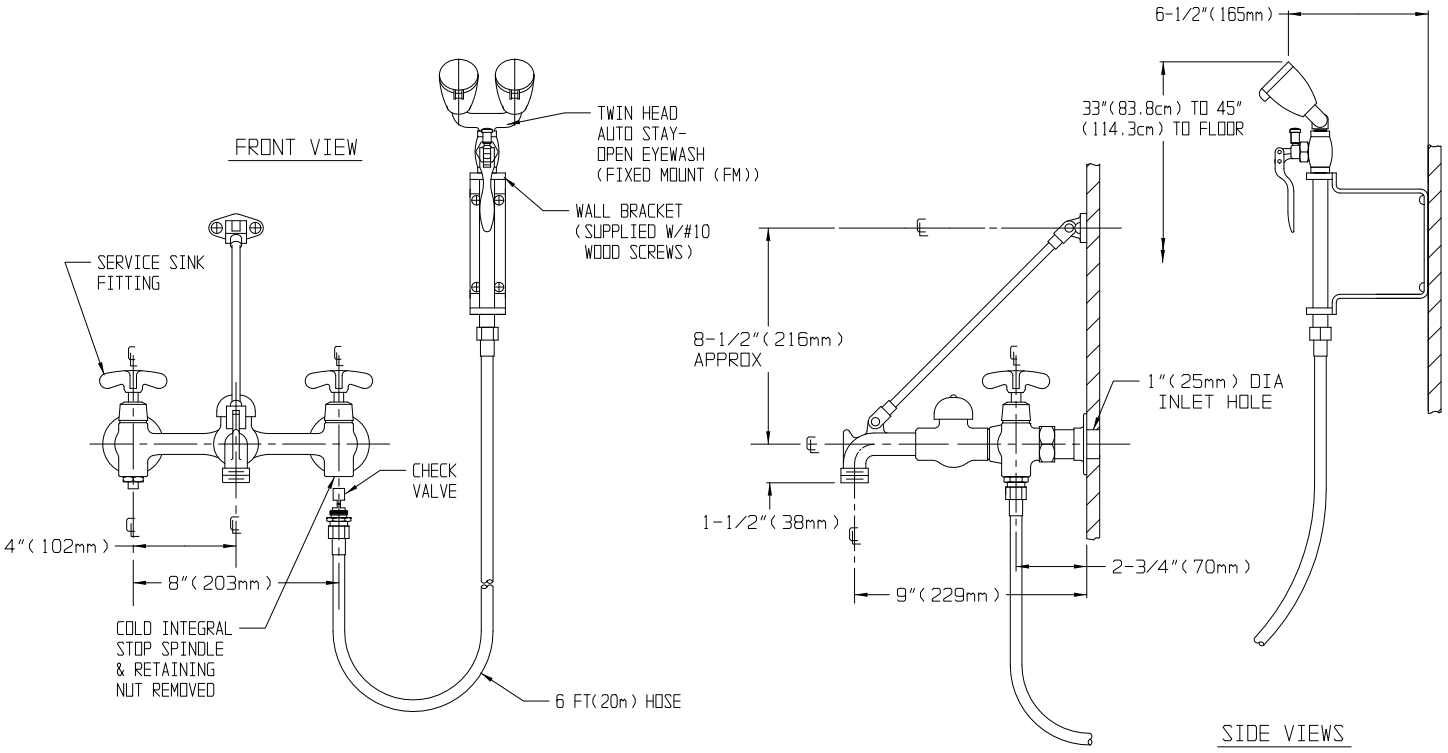

Architect/Engineer Approval Space:

SPEAKMAN
400 ANCHOR MILL ROAD
NEW CASTLE, DE 19720

P: 800-537-2107
F: 800-977-2747
W: WWW.SPEAKMAN.COM
R: JULY 2017

SPEAKMAN® SEF-9200

Eyesaver® Eyewash/Drench Hose Attachment



EYEWASH FEATURES:

- Connects to Speakman SC-5811-RCP service sink faucet's cold water integral stop port supply
- 6 ft. stainless steel supply hose
- Activated by squeeze valve with automatic stay open device
- (2) yellow plastic spray heads
- 3.06 gpm @ 30 psi performance (eyewash only)
- 2.66 gpm @ 30 psi (with sink on)
- Integral vacuum breaker and check valve
- Can also be used on Ferguson ProFlo PF1119 or FIAT 830AA

SERVICE SINK FAUCET (Sold Separately)

- ½ in. NPT female inlets supply
- Vandal resistant four-arm handles with color coded indexes
- Perfect® valves with ¼ turn ceramic cartridges
- Cast brass nozzle with ¾ in. hose thread, pail hook and top brace
- 4 gpm (min)
- Integral vacuum breaker

COMPLIANCE:

- ANSI/ISEA Z358.1 certified

OPTIONS: Add suffix to model

- Addition of SE-370 thermostatic mixing valve ❑ -TW

WARRANTY:

- 3 year limited

Architect/Engineer Approval Space:

SPEAKMAN
400 ANCHOR MILL ROAD
NEW CASTLE, DE 19720

P: 800-537-2107
F: 800-977-2747
W: WWW.SPEAKMAN.COM
R: JULY 2017

DIMENSIONS:

NOTE: 1. All dimensions are in inches (millimeters) unless otherwise specified and are subject to change without notice.

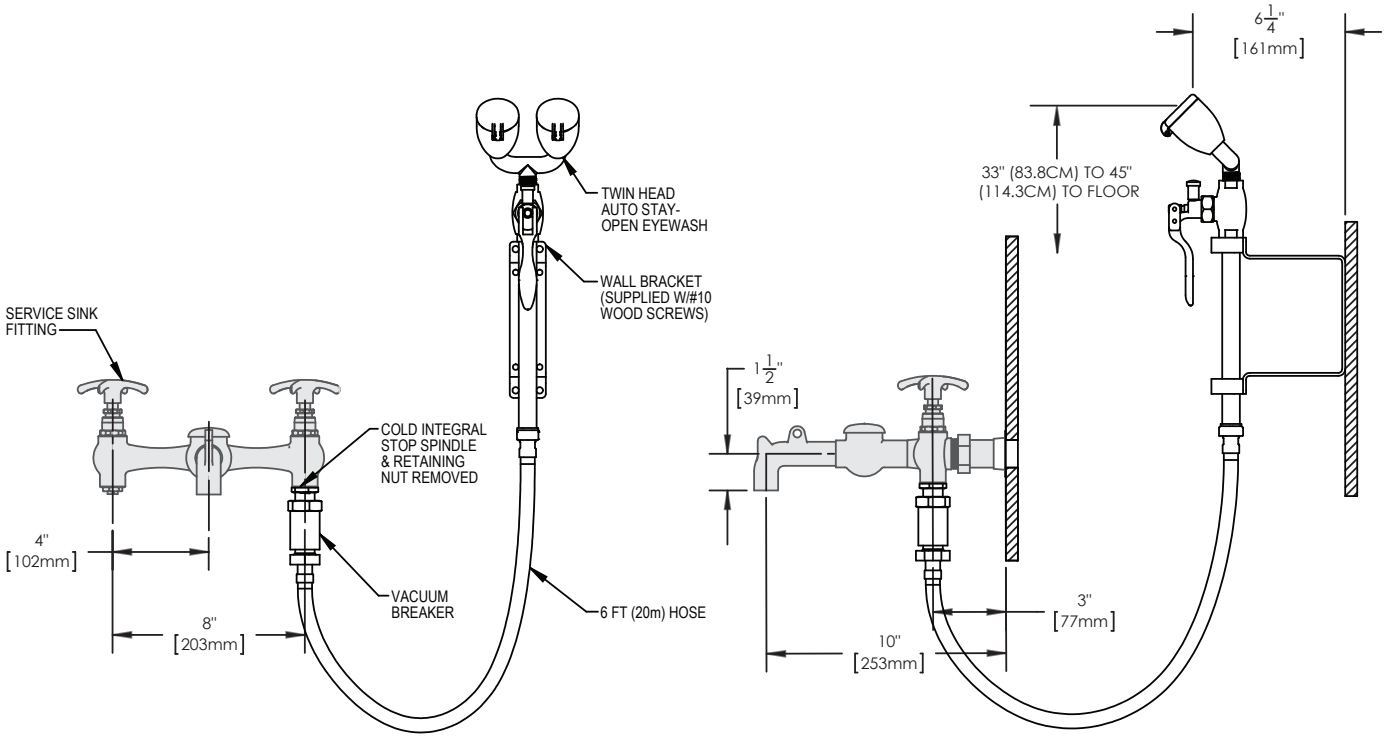

Architect/Engineer Approval Space:

SPEAKMAN
400 ANCHOR MILL ROAD
NEW CASTLE, DE 19720

P: 800-537-2107
F: 800-977-2747
W: WWW.SPEAKMAN.COM
R: JULY 2017

SPEAKMAN® SEF-9200-ILR

Eyesaver® Eyewash/Drench Hose Attachment

EYEWASH FEATURES:

- Connects to a faucet's cold water supply line.
- 6 ft. stainless steel supply hose
- Activated by squeeze valve with automatic stay open device
- (2) yellow plastic spray heads
- 3.06 gpm @ 30 psi performance (eyewash only)
- Integral vacuum breaker.

COMPLIANCE:

- ANSI/ISEA Z358.1 certified

WARRANTY:

- 3 year limited

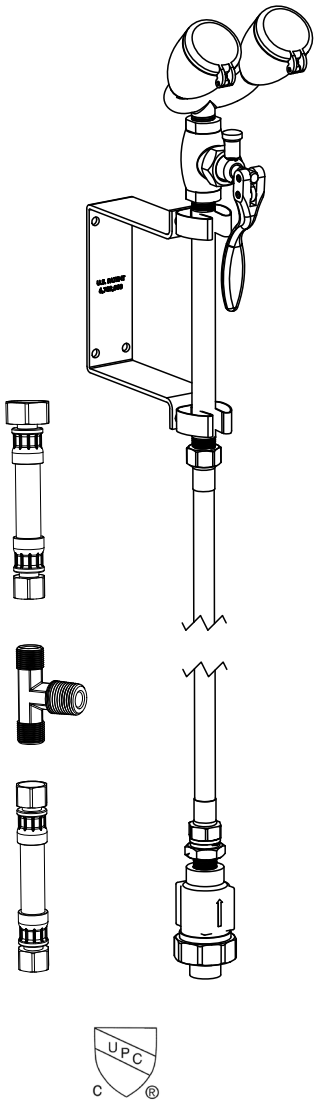

Architect/Engineer Approval Space:

SPEAKMAN
400 ANCHOR MILL ROAD
NEW CASTLE, DE 19720

P: 800-537-2107
F: 800-977-2747
W: WWW.SPEAKMAN.COM
R: JULY 2017

DIMENSIONS:

NOTE: 1. All dimensions are in inches (millimeters) unless otherwise specified and are subject to change without notice.

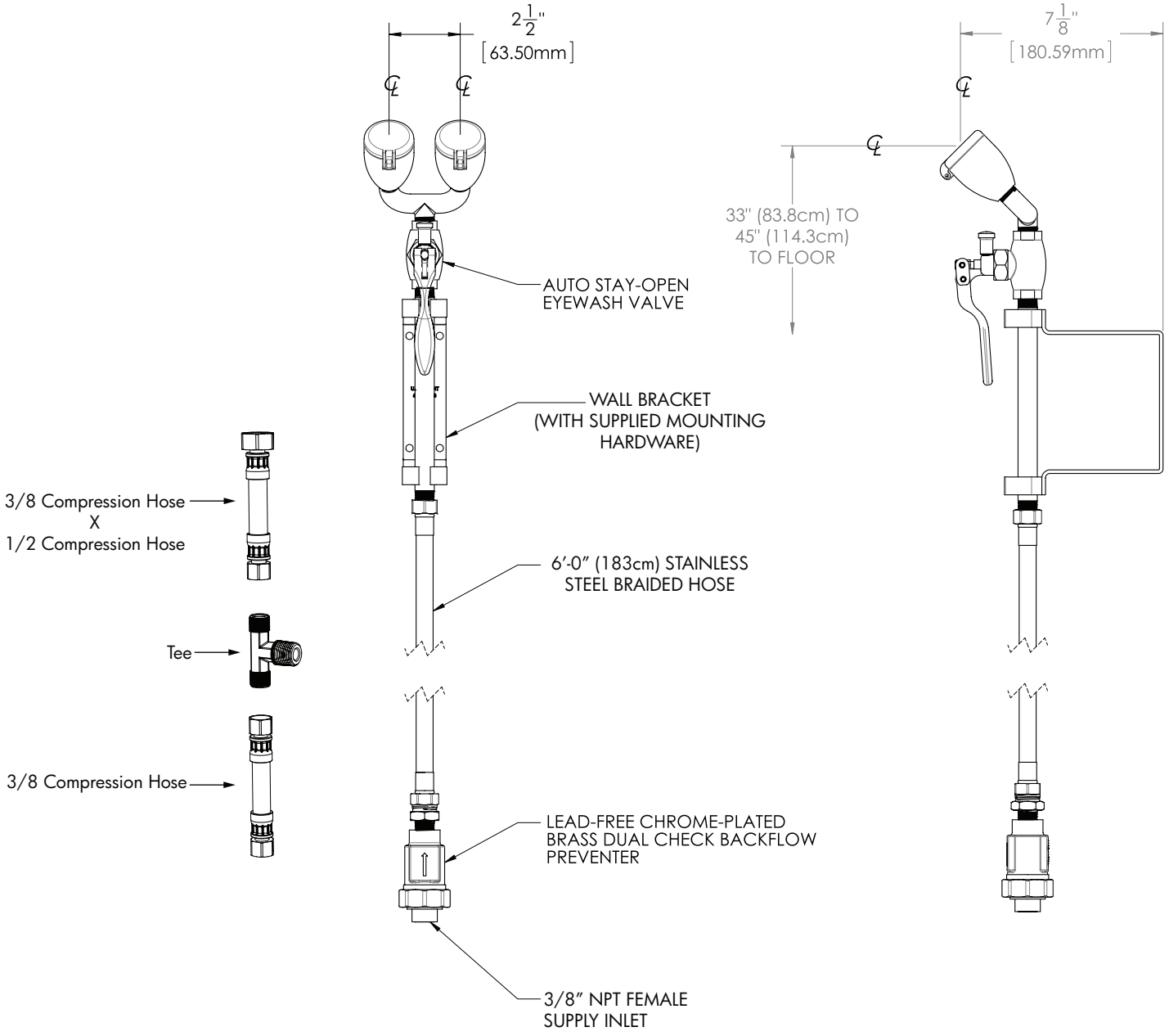

Architect/Engineer Approval Space:

SPEAKMAN
400 ANCHOR MILL ROAD
NEW CASTLE, DE 19720

P: 800-537-2107
F: 800-977-2747
W: WWW.SPEAKMAN.COM
R: JULY 2017