S-2254

SPEAKMAN®

Retro™ Shower Head

MODELS:

- S-2254: 2.5 GPM (9.5 L/min) flow rate
- S-2254-E2: 2.0 (7.6 L/min) flow rate
- S-2254-E175: 1.75 GPM (6.6 L/min) flow rate

FEATURES:

- 6 plungers, 48 sprays, 3 spray patterns
- Patented Anystream® plungers resist scale build-up
- Spray adjusting handle
- Solid brass construction
- 1/2" -14 NPTF female inlet
- Corrosion resistant finishes

STOCK FINISHES:



PC BN PB

SPECIALTY FINISHES:



PN ORB

STANDARDS:

- ASME A112.18.1/CSA B125.1 certified
- CEC (CA Energy Commission) certified, 1.75 GPM only
- WaterSense certified, 2.0 & 1.75 GPM only

WARRANTY:

Visit www.speakman.com for full product warranty information

- Limited Lifetime Warranty (consumer)
- 1 Year Limited Warranty (commercial)



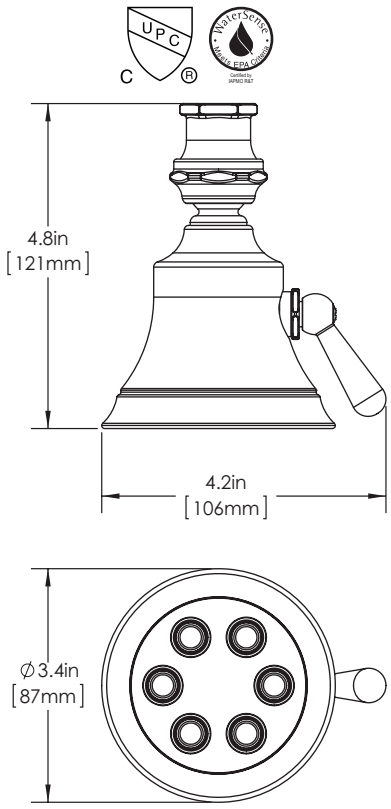

All dimensions are in inches (millimeters) unless otherwise specified and are subject to change without notice.

Architect/Engineer Approval Space:

SPEAKMAN
400 ANCHOR MILL ROAD
NEW CASTLE, DE 19720

P: 800-537-2107
F: 800-977-2747
W: WWW.SPEAKMAN.COM
R: 01-APRIL 2018