SPEAKMAN®

SLV-5440

Installation, Operation & Maintenance Instructions

SENTINELPRO™ COMBINATION SERIES

DESCRIPTION

Speakman SentinelPro™ Combination, SLV-5440 includes: Trim with integral Volume Control / Diverter Handle (CPT-5401), Hand Shower with Flow Control (VS-100-PC), Supply Ell with Wall Flange (VS-115), In-line Vacuum Breaker (VS-117), 30in Slide Bar (VS-123), and 69in Metal (SS) Hose. This combination does not include the Shower Valve.

TP-DV This combination should be installed with one of the following Speakman SentinelPro™ Thermostatic/Pressure Balance Diverter Shower Valves

CPV-TP-DV: Thermostatic/Pressure Balance Diverter Shower Valve
Sweat & Thread Connections

CPV-TP-DV-PXC: Thermostatic/Pressure Balance Diverter Shower Valve
PEX F1807 Crimp Inlet Connections

CPV-TP-DV-PXE: Thermostatic/Pressure Balance Shower Valve
PEX F1960 Cold-Expansion Inlet Connections

SPECIFICATIONS

CPT-5401 T/P DIVERTER VALVE TRIM:
FINISH: Polished Chrome
COMPLIANCE: ASME A112.18.1 / CSA B125.1 Standard

VS-100-PC HAND SHOWER WITH FLOW CONTROL:
CONNECTIONS: ½" NPSM Male Inlet
FLOW RATE: 2.5 gpm (9.5 L/min)
FINISH: Polished Chrome
COMPLIANCE: ASME A112.18.1 / CSA B125.1 Standard

VS-115 SUPPLY ELL WITH WALL FLANGE:
CONNECTIONS: ½" NPT Female Inlet; ½" NPSM Male Outlet
FINISH: Polished Chrome

VS-117 IN-LINE VACUUM BREAKER:
CONNECTIONS: ½" NPSM Female Inlet; ½" NPSM Male Outlet
FINISH: Polished Chrome
COMPLIANCE: ASSE 1014 Standard

VS-123 30in SLIDE BAR:
FINISH: Polished Chrome

INSTRUCTIONS

See individual products for installation of the components and warranty information.

ROUGH-IN

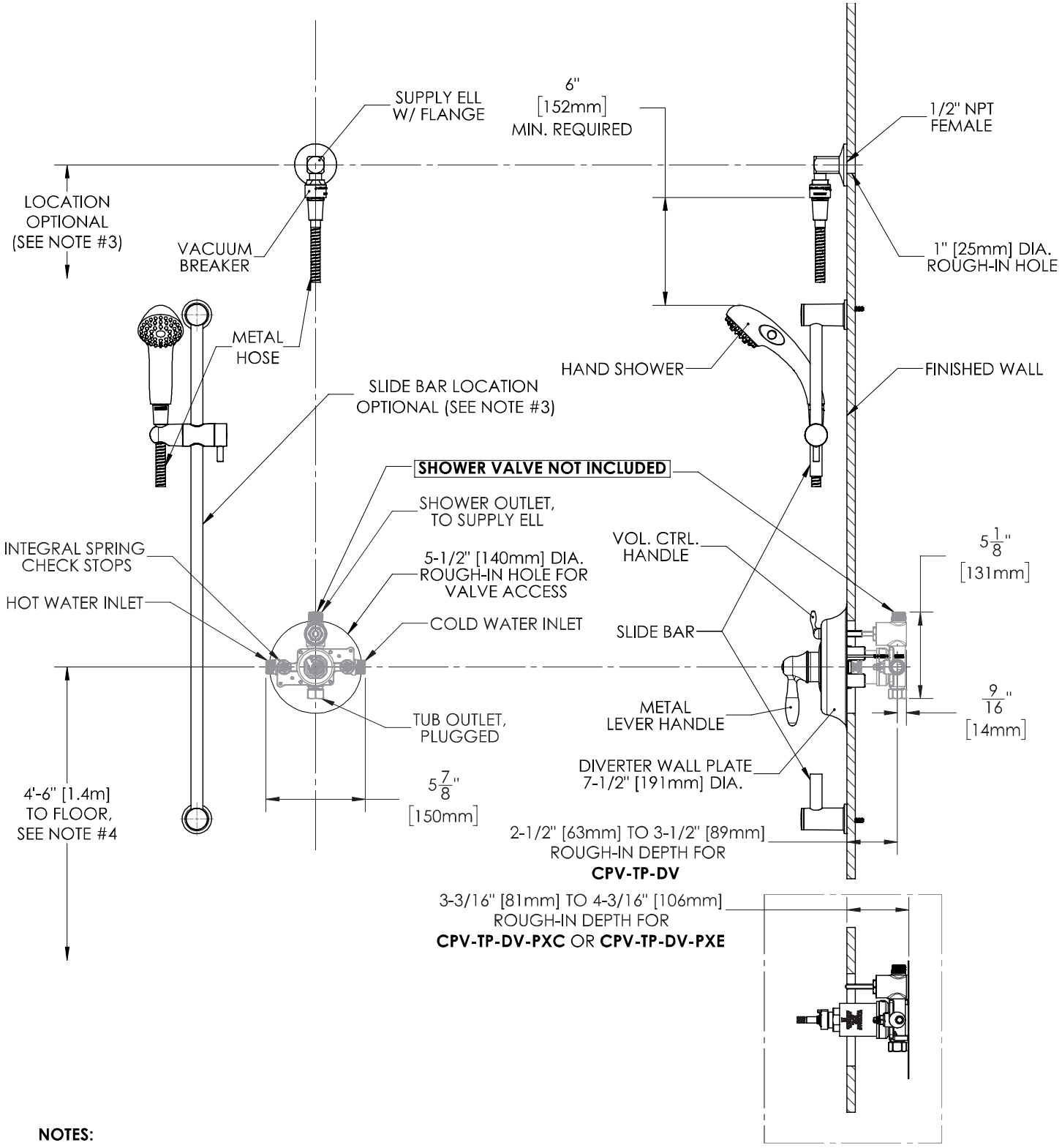

NOTES:

1. ALL DIMENSIONS ARE IN INCHES [MILLIMETERS] UNLESS OTHERWISE SPECIFIED AND ARE SUBJECT TO CHANGE WITHOUT NOTICE.
2. ALL INLETS AND OUTLETS ARE 1/2" FEMALE COPPER SWEAT AND 1/2" MALE NPT UNLESS OTHERWISE SPECIFIED.
3. THE LOCATIONS OF THE SLIDE BAR AND SUPPLY ELL ARE OPTIONAL, BUT RESTRICTED BY THE 69" HOSE LENGTH RUNNING FROM THE SUPPLY ELL CONNECTION TO THE HAND SHOWER AND THE 6" MINIMUM REQUIREMENT BETWEEN THE IN-LINE VACUUM BREAKER AND TOP OF THE HAND SHOWER (HAND SHOWER ADJUSTED TO HIGHEST POSITION).
4. FOR ADA MOUNTING LOCATIONS CONSULT ADAAG, ANSI A117.1, OR STATE REGULATIONS.

INSTRUCTIONS FOR MODELS

CPT-5001 / CPT-5401

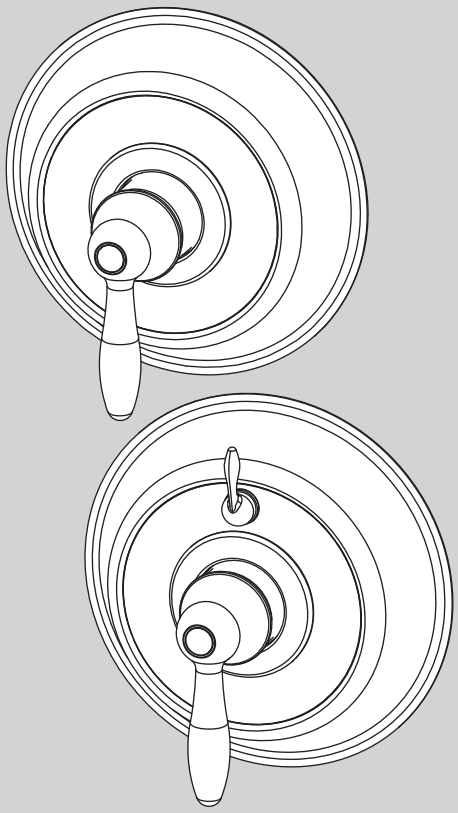

NEED HELP?

For additional assistance or service please contact:

SPEAKMAN® Company
400 Anchor Mill Road
New Castle, DE 19720

800-537-2107

customerservice@speakman.com

www.speakman.com

92-CPT-5001-01

TOOLS AND SUPPLIES

Phillips Screwdriver

Silicone

Caulk Gun

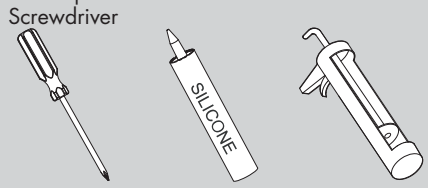

⚠ IMPORTANT ⚠

- Do not over-tighten any connections or damage may occur.
- Be sure to read instructions thoroughly before beginning installation.
- This valve has an operating range of 20-80 psi.

SAFETY TIPS

Cover your drain to prevent loss of parts. Be sure to wear eye protection while cutting pipe.

MAINTENANCE

Your new Speakman Product is designed for years of trouble-free performance. Keep it looking new by cleaning it periodically with a soft cloth. The use of harsh chemicals and abrasives on any of the Speakman custom finish products may damage the finish and void the product warranty. Please be sure to only use approved cleaners. Please contact Speakman for any clarification of acceptable cleaners.

WARRANTY

Additional warranty information can be found at: www.speakman.com

1 Remove the Handle Button Screw by inserting one of the included Mounting Screws thru the hole in the Handle.

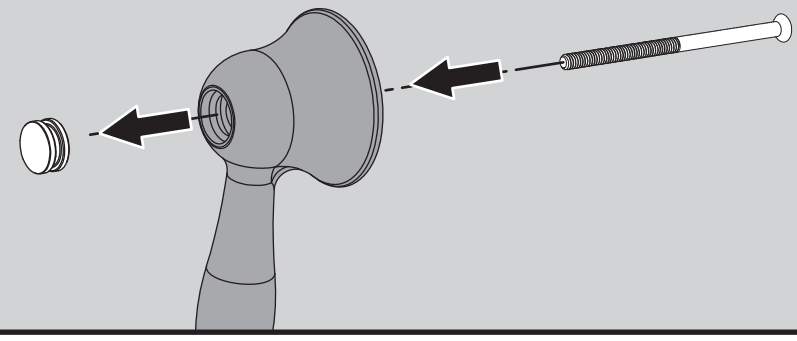

2 Insert the T/P Rubber Sleeve with Tabs over Valve Bonnet.

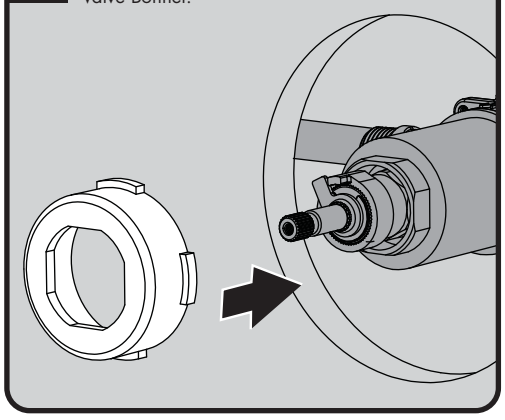

3 Be sure to have properly adjusted the Temperature Limiting Stop (TLS) as per the Valve Installation Instructions before installing Valve Trim. Slide Trim Sleeve over the Rubber Sleeve. Ensure the tabs are properly seated within the grooves of the Trim Sleeve.

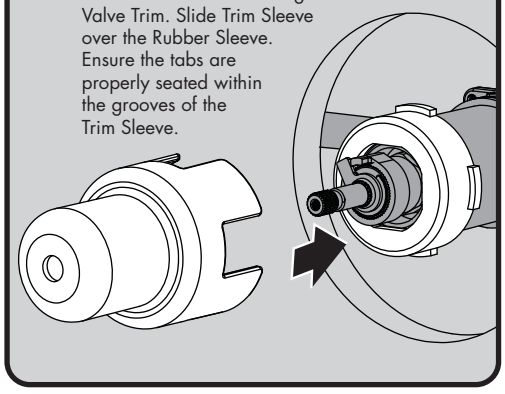

4 Clean wall surface. Orient Wall Plate as shown below. Apply clear silicone sealant to the backside outer flat surface of the Wall Plate, while leaving a small area open at the bottom. This will allow for any moisture to drain.

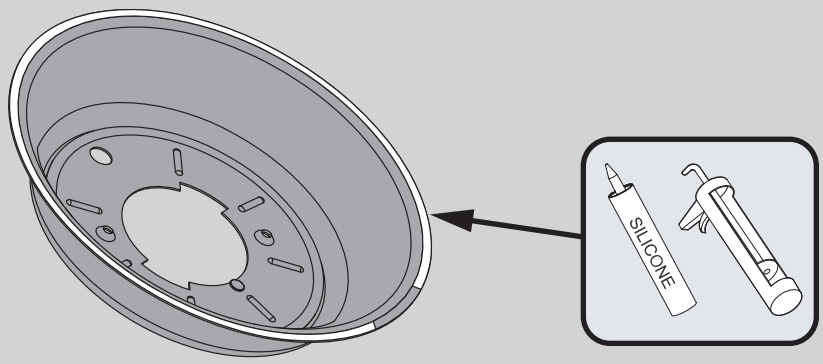

5A **FOR CPT-5001 -** Align the Wall Plate (1) as shown below. Secure to Valve with the included Mounting Screws (2). Take care to not over tighten Mounting Screws. Remove excess sealant after securing Wall Plate to wall.

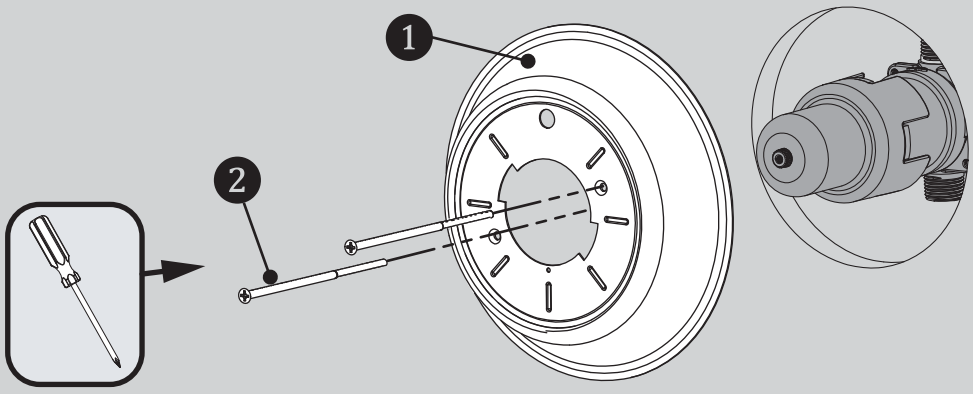

6 Remove protective film from Trim Index Plate.

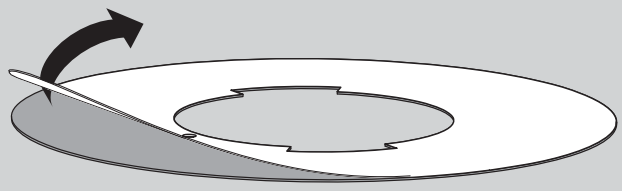

5B **FOR CPT-5401 -** Align the Wall Plate (1) as shown below. Verify the Diverter Valve Stem is in the OFF (vertical) position. Align the Diverter Drive Tube (3) on the Wall Plate to the Stem (4) of the Diverter Valve. Secure to Valve with the included Mounting Screws (2). Take care to not over tighten Mounting Screws. Remove excess sealant after securing Wall Plate to wall.

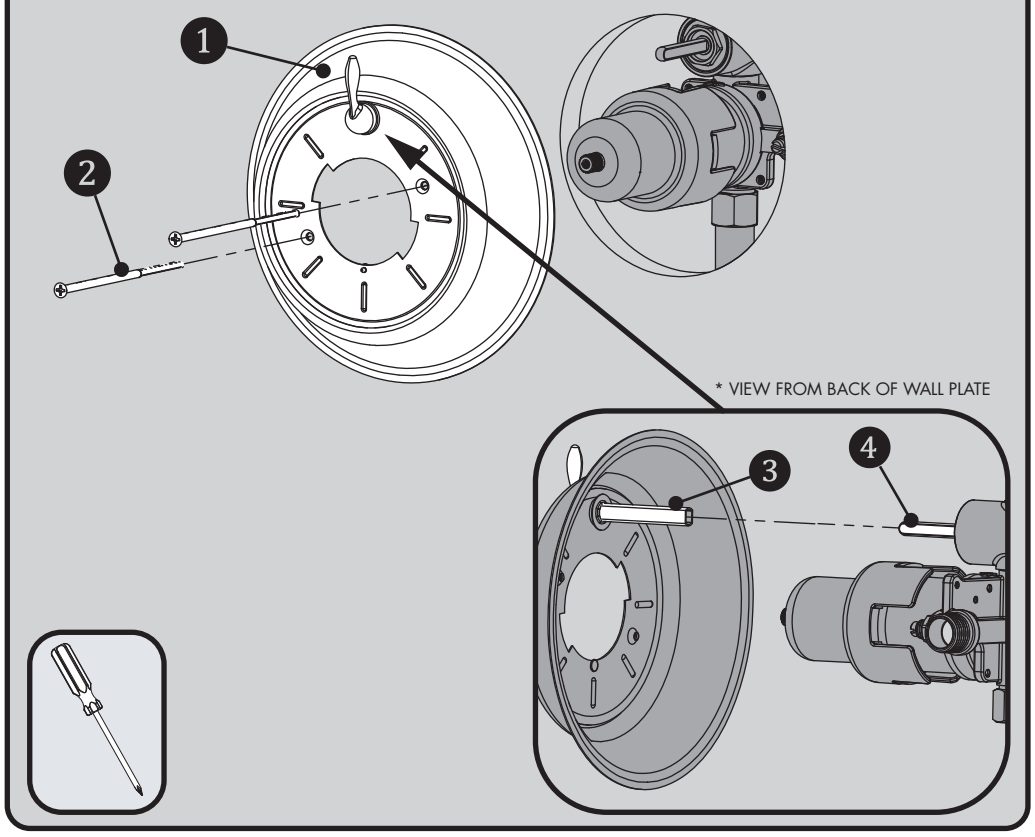

7

CPT-5001: Slide Index Plate over the Trim Sleeve. Align Index Plate with the small Alignment Pin on the Wall Plate, and hold Index Plate in place for the next step.

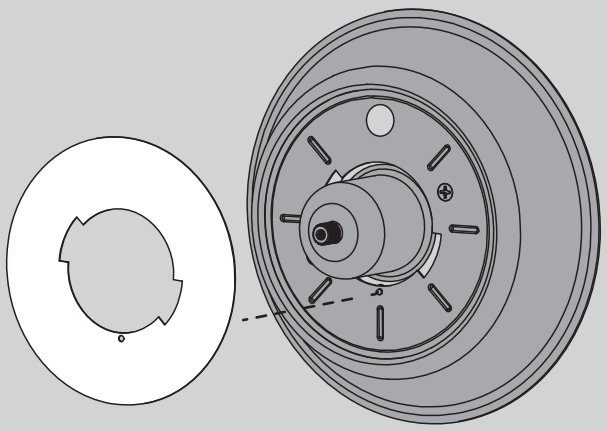

OR

CPT-5401: Slip the upper hole of the Index Plate over the Diverter Handle and then align the large hole of the Index Plate over the Trim Sleeve. Align Trim Index Plate with the small Alignment Pin on the Wall Plate, and hold Index Plate in place for the next step.

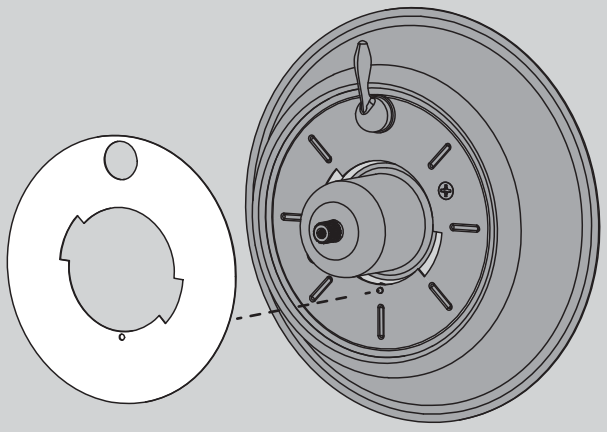

8 Ensure the Rubber Gasket is correctly installed to the Retaining Ring. Align the Retaining Ring with the slots on the Wall Plate. Press and Rotate the ring clock-wise until it Locks / Seals in place. Make sure the seal is secure with the Wall Plate.

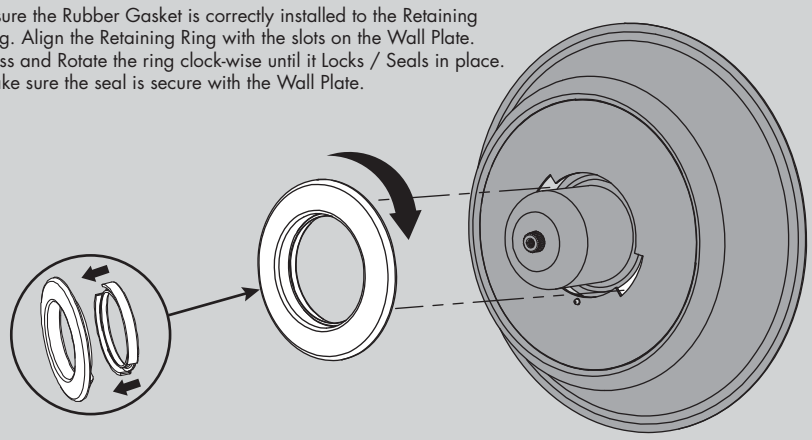

9 Temporarily place Handle over splines and adjust the valve to the OFF position (as per the Valve Instructions). Then, align Handle vertically as shown below. Secure Handle to Spindle with the included #8 Screw.

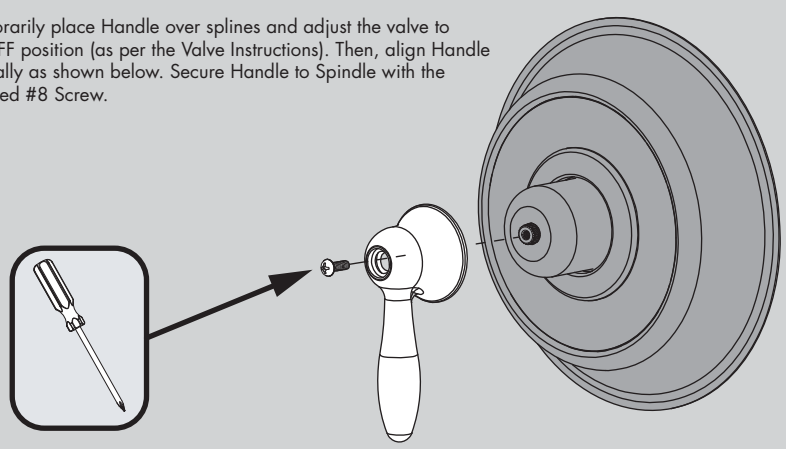

10 Insert Handle Button into the Handle.

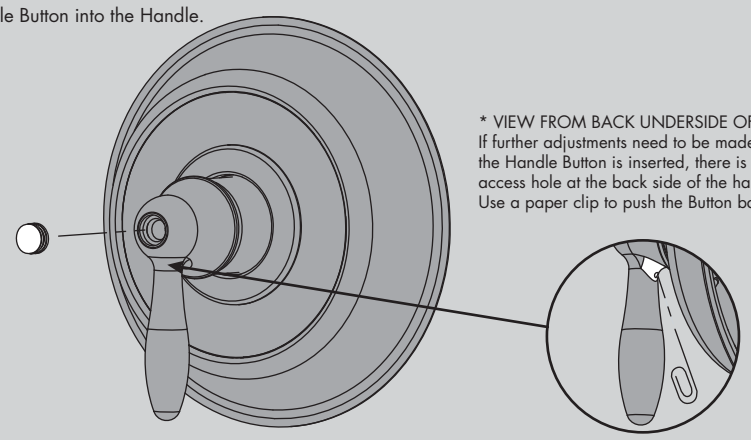

* VIEW FROM BACK UNDERSIDE OF HANDLE
If further adjustments need to be made after the Handle Button is inserted, there is an access hole at the back side of the handle. Use a paper clip to push the Button back out.

CPT-5001 / CPT-5401 REPAIR PARTS

SPEAKMAN®

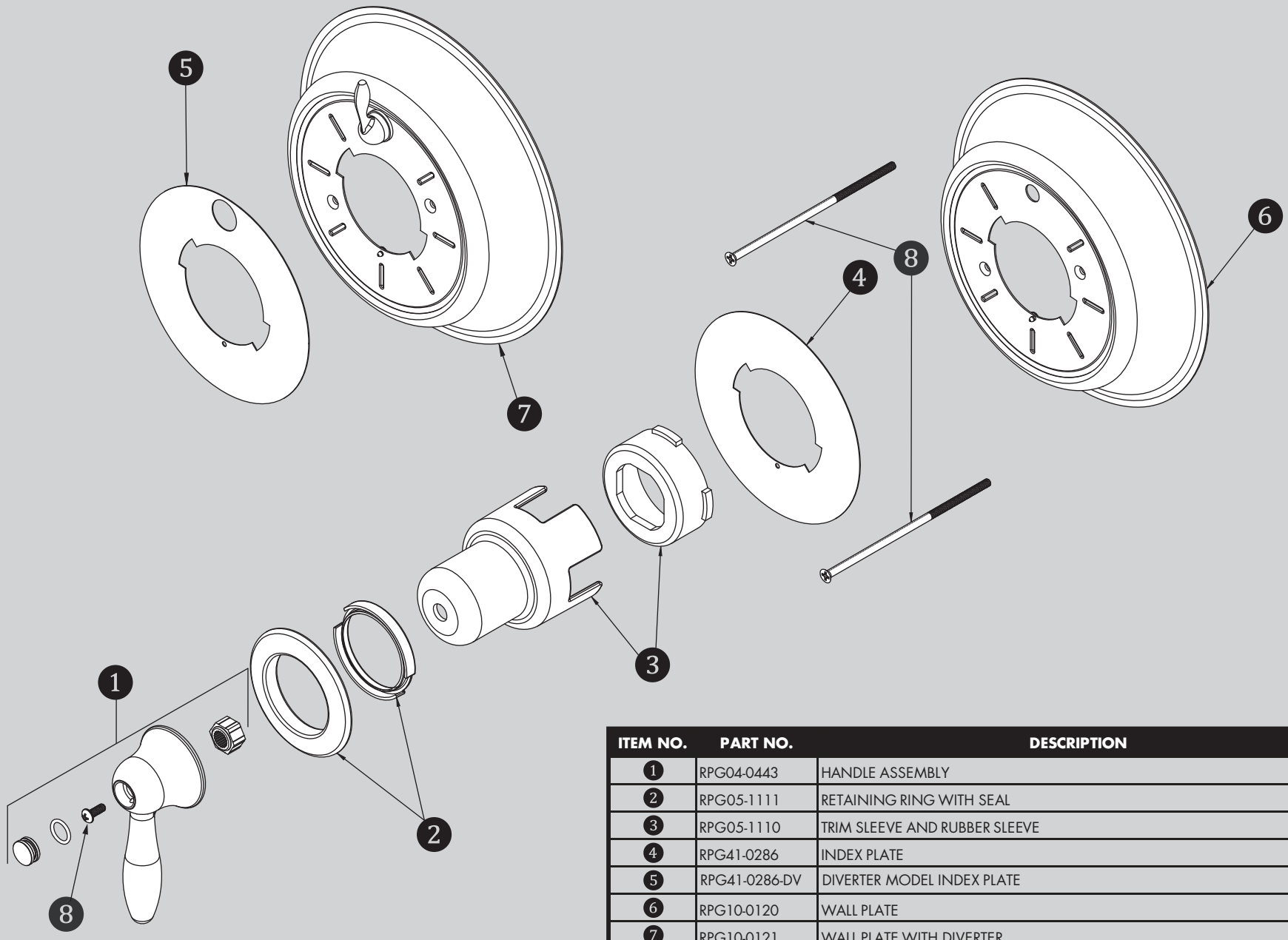

ITEM NO.	PART NO.	DESCRIPTION
1	RPG04-0443	HANDLE ASSEMBLY
2	RPG05-1111	RETAINING RING WITH SEAL
3	RPG05-1110	TRIM SLEEVE AND RUBBER SLEEVE
4	RPG41-0286	INDEX PLATE
5	RPG41-0286-DV	DIVERTER MODEL INDEX PLATE
6	RPG10-0120	WALL PLATE
7	RPG10-0121	WALL PLATE WITH DIVERTER
8	RPG10-0119	MOUNTING HARDWARE (ALL SCREWS)

CPT-5001 ROUGH-IN DIAGRAM

SPEAKMAN®

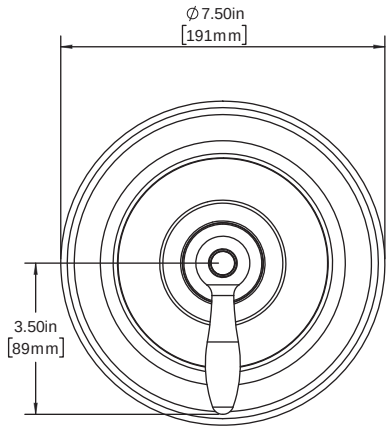

VALVE MOUNTING IS SHOWN FOR REFERENCE ONLY.
VALVE IS NOT INCLUDED WITH CPT-5000

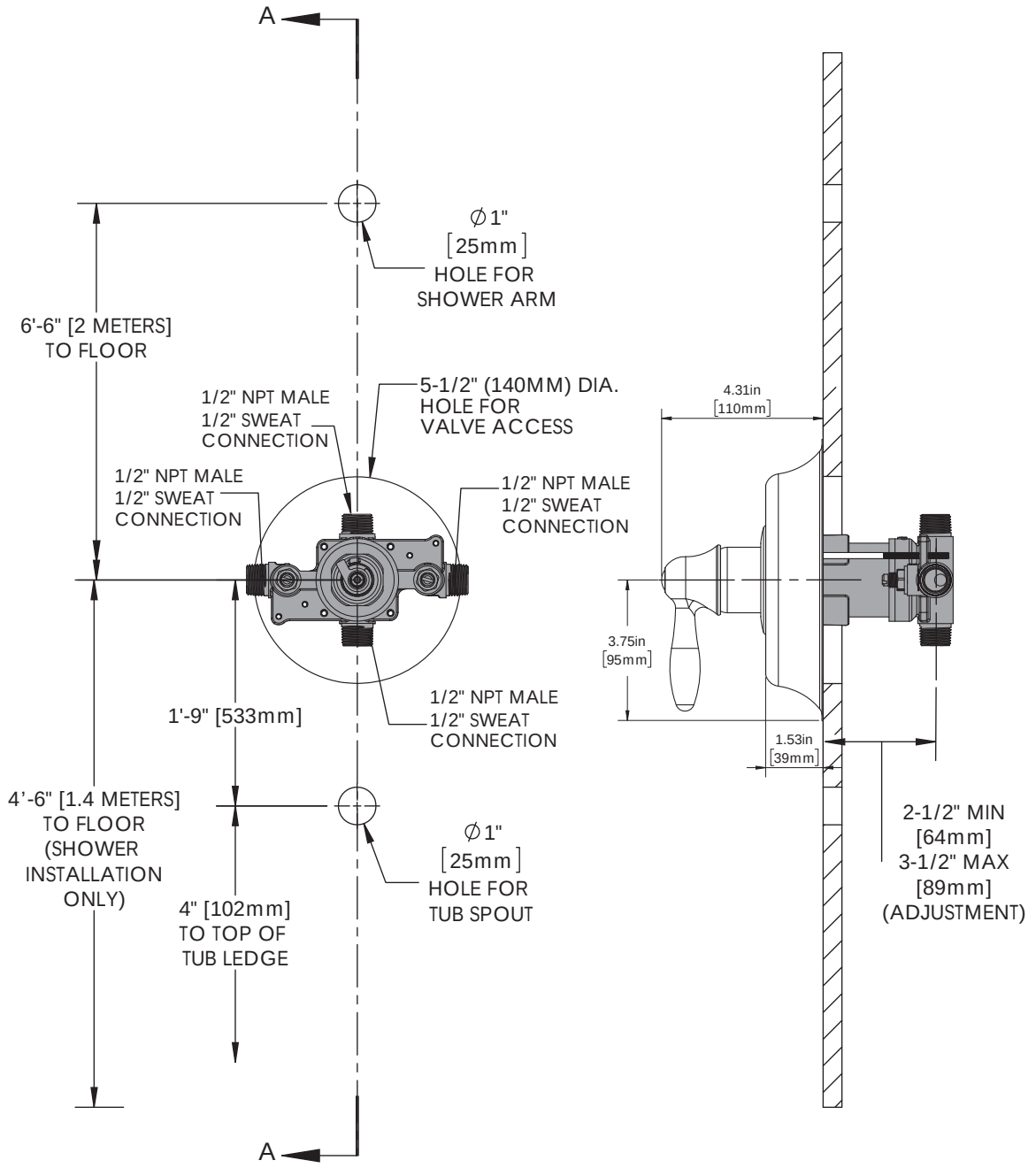

DIMENSIONS SUBJECT TO CHANGE WITHOUT NOTICE.

CPT-5401 ROUGH-IN DIAGRAM

SPEAKMAN®

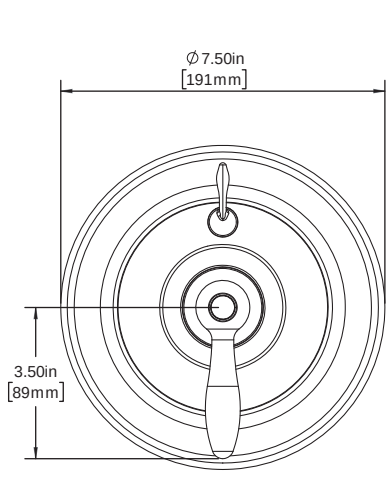

VALVE MOUNTING IS SHOWN FOR REFERENCE ONLY.
VALVE IS NOT INCLUDED WITH CPT-5400

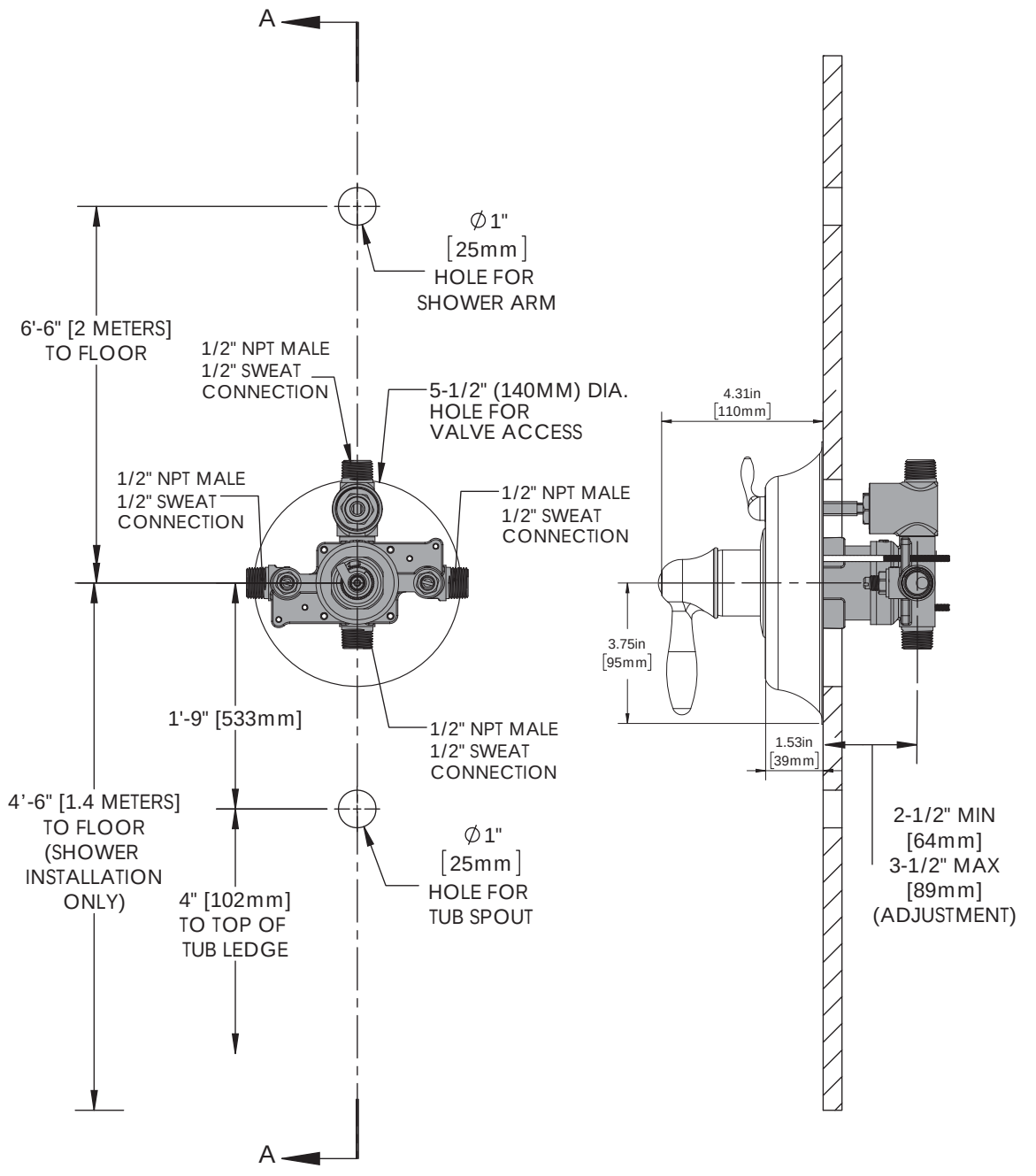

DIMENSIONS SUBJECT TO CHANGE WITHOUT NOTICE.

INSTRUCTIONS FOR MODELS

VS-100-PC
VS-100-PC-E2
VS-100-PC-E175

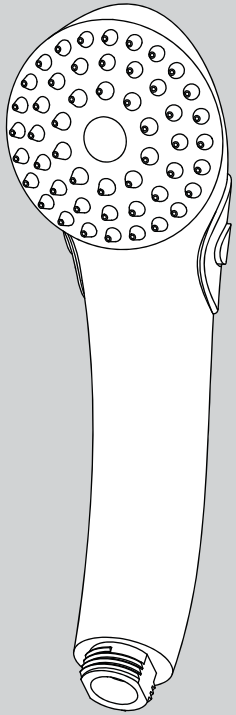

NEED HELP?

For additional assistance or service please contact:

SPEAKMAN® Company
400 Anchor Mill Road
New Castle, DE 19720

800-537-2107

customerservice@speakman.com

www.speakman.com

92-VS-100-PC-04

TOOLS AND SUPPLIES

Thread Seal Tape (included)



⚠ IMPORTANT ⚠

Be sure to read instructions thoroughly before beginning installation. Do not overtighten any connections or damage may occur. This hand shower has an optimal operating range of 20-80 psi.

SAFETY TIPS

Cover your drain to prevent loss of parts.

MAINTENANCE

Periodic cleaning using a mild soap and warm water will help keep your Hand Shower's appearance in its original condition.

For best results, dry immediately with a soft, clean cloth. DO NOT USE harsh and/or abrasive cleaners.

On CHROME PLATED HAND SHOWERS, a two (2) part white vinegar, one (1) part water solution can be used to break down excessive mineral deposits on the sprays. Let the hand shower soak in the solution for about ½ hour then rinse thoroughly. Brush off any remaining mineral deposits if necessary.

DO NOT USE the vinegar/water treatment on any finish other than Chrome.

WARRANTY

Additional warranty information can be found at: www.speakman.com

1 Connect the correct side of your hose (not included) to the water supply. Hand tighten.

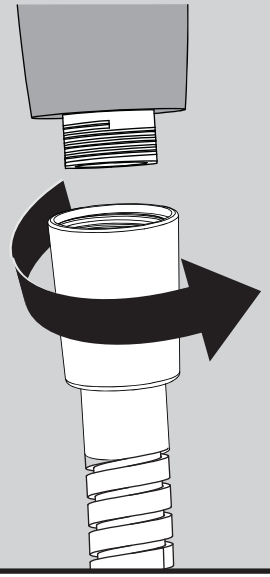

2 Connect remaining end of Hose to inlet of Hand Shower. Hand tighten. If there are leaks at the hose connections, look into using thicker washers to ensure a tight seal.

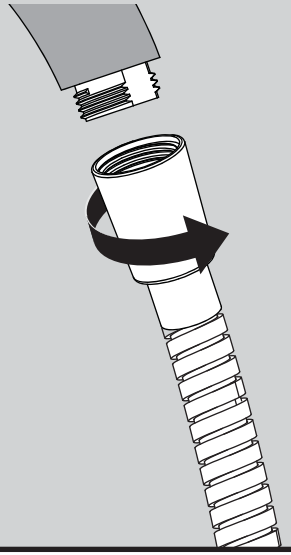

3 To pause the flow of water, press the integral thumb operated pause/trickle button located on the side of the hand shower. To return the hand held shower to full flow, press the shuttle button from the opposite side.

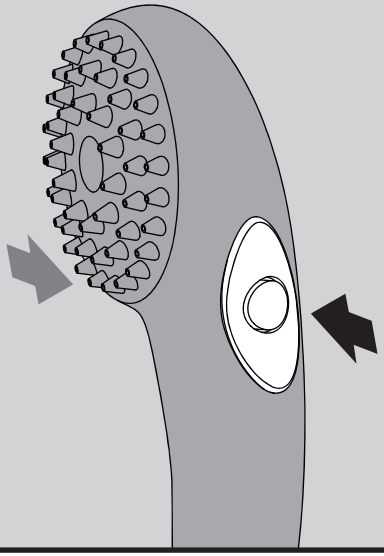

ROUGH IN DIMENSIONS

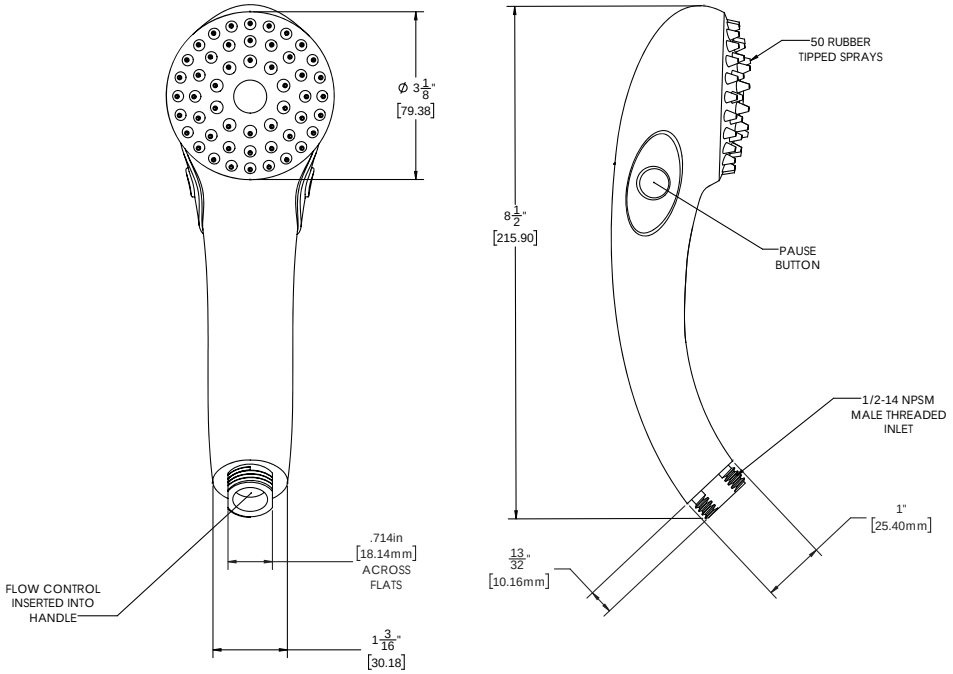

VS-100-PC
Max. Flow Rate: 2.5 gpm (9.5L/min)
Min. Flow Rate: 2.0 gpm (7.6 L/min) @ 45psi
FOR USE WITH AUTOMATIC COMPENSATING VALVES
RATED AT 7.6 L/MIN (2.0 GPM) OR LESS.

VS-100-PC-E2
Max. Flow Rate: 2.0 gpm (7.6 L/min)
Min. Flow Rate: 1.5 gpm (5.7 L/min) @ 45psi
FOR USE WITH AUTOMATIC COMPENSATING VALVES
RATED AT 6.6 L/MIN (1.75 GPM) OR LESS.

VS-100-PC-E175
Max. Flow Rate: 1.75 gpm (6.6 L/min)
Min. Flow Rate: 1.3 gpm (4.9 L/min) @ 45psi
FOR USE WITH AUTOMATIC COMPENSATING VALVES
RATED AT 5.7 L/MIN (1.5 GPM) OR LESS.

SPEAKMAN COMPANY

VS-115 Installation, Maintenance & Operation Instructions

VERSATILE ® SUPPLY ELL

DESCRIPTION

VERSATILE® chrome plated brass supply ell with wall flange.

SPECIFICATIONS

SUPPLY INLET: ½" NPT FEMALE
OUTLET: ½" NPSM MALE
SHIPPING WEIGHT: 0.4 LBS.

INSTALLATION

Slip the wall flange on to the inlet pipe. Using teflon tape or pipe dope on threads, screw ell onto pipe and wrench tighten. Connect accessories to supply ell and firmly hand tighten. Turn water supply on and check for leaks.

MAINTENANCE

The gleaming finish of your SPEAKMAN VERSATILE® VS-115 supply ell can be cleaned by using mild soap and warm water. Dry immediately with a soft, clean cloth for best results.

ROUGH-IN MEASUREMENTS

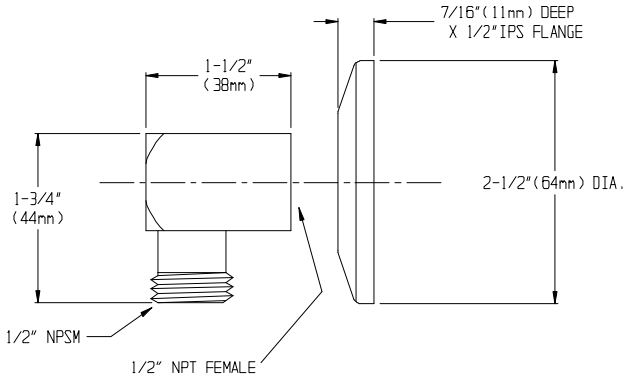

Product improvements may cause specification and dimensional changes without notice.

SPEAKMAN®
PO Box 191 Wilmington, DE 19899 Phone: 800-537-2107 Fax: 800-977-2747
Visit us on the web at www.speakmancompany.com

09/07
REV 1
92-1775

SPEAKMAN COMPANY

VS-117 Installation, Maintenance & Operation Instructions

VERSATILE ® VACUUM BREAKER

DESCRIPTION

VERSATILE® chrome plated brass in-line vacuum breaker.

SPECIFICATIONS

SUPPLY INLET: ½" NPSM FEMALE
OUTLET : ½" NPSM MALE
SHIPPING WEIGHT: XXX LBS.

INSTALLATION

Connect, using rubber washer, to supply piping. Connect accessories to vacuum breaker. Firmly hand tighten connection. Turn water supply on and check for leaks.
Note: Do not install VS-117 in concealed locations or where spillage under certain service conditions might cause water damage. Avoid continuous pressure applications (shut off valve downstream of the vacuum breaker).

MAINTENANCE

The gleaming finish of your SPEAKMAN VERSATILE® VS-117 vacuum breaker can be cleaned by using mild soap and warm water. Dry immediately with a soft, clean cloth for best results.

ROUGH-IN MEASUREMENTS

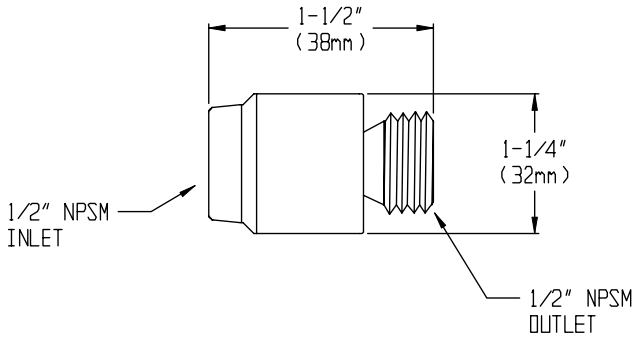

Product improvements may cause specification and dimensional changes without notice.

SPEAKMAN COMPANY
The Quality Leader Since 1869
P.O. Box 191, Wilmington, DE 19899-0191 USA
1-800-537-2107, Fax: 1-800-977-2747

04/00
92-1783

INSTRUCTIONS FOR MODELS

VS-123
VS-124

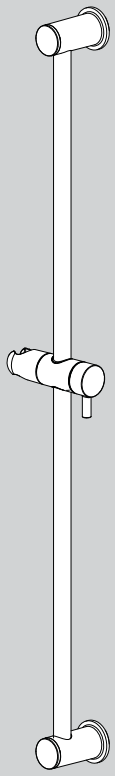

NEED HELP?

For additional assistance or service please contact:

SPEAKMAN® Company
400 Anchor Mill Road
New Castle, DE 19720

800-537-2107

customerservice@speakman.com

www.speakman.com

92-VS-12X-01

TOOLS AND SUPPLIES

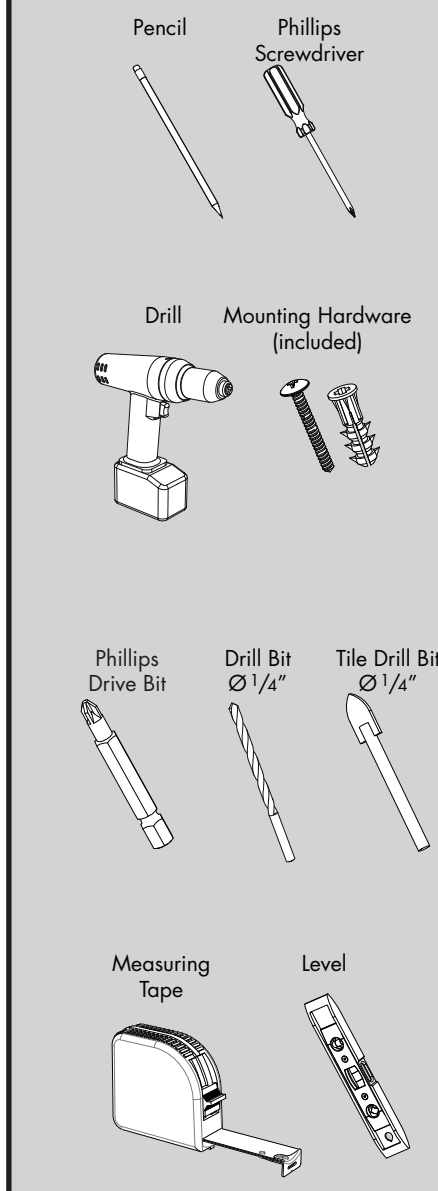

IMPORTANT

- Do not over-tighten any connections or damage may occur.
- Be sure to read instructions thoroughly before beginning installation.

SAFETY TIPS

- Cover your drain to prevent loss of parts. Be sure to wear eye protection.

MAINTENANCE

Your new Speakman Product is designed for years of trouble-free performance. Keep it looking new by cleaning it periodically with a soft cloth. The use of harsh chemicals and abrasives on any of the Speakman custom finish products may damage the finish and void the product warranty. Please be sure to only use approved cleaners. Please contact Speakman for any clarification of acceptable cleaners.

WARRANTY

Warranty information can be found at:
www.speakman.com

1 Remove End Caps from both ends of Slide Bar assembly.

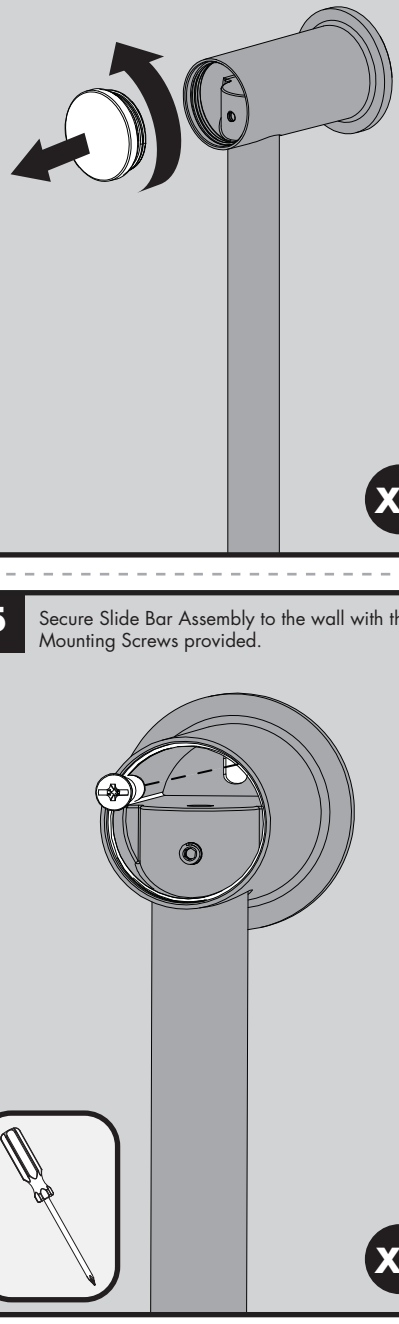

2 Place Slide Bar Assembly on to wall in the desired mounting position. Take care that the Slide Bar is oriented in a vertical position. Using a pencil, mark the 2 hole locations.

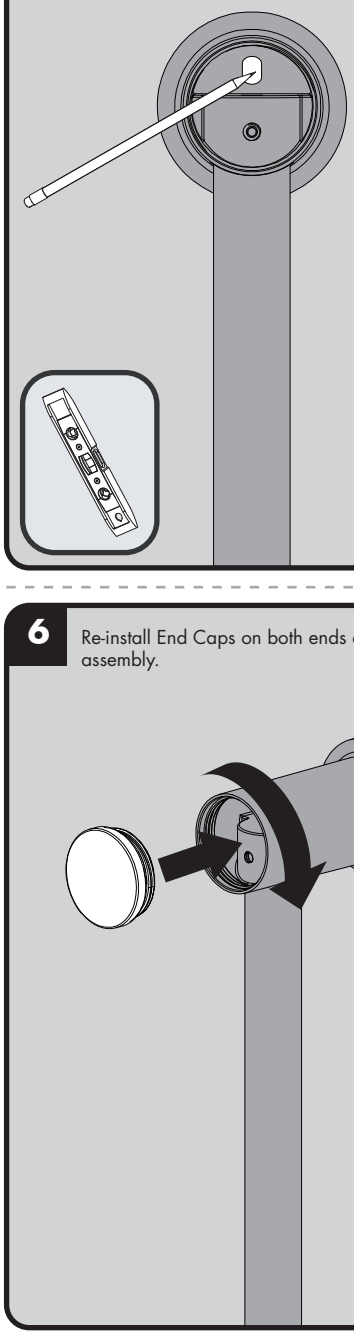

3 If mounting directly to wood stud, Plastic Anchors are not required. If mounting to drywall or tile, select appropriate 1/4" drill bit and drill guide holes at marked locations.

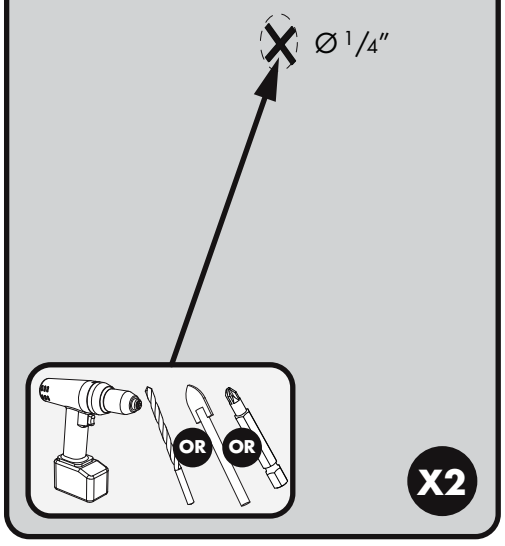

4 Insert Plastic Anchors into drilled holes and press/tap into place until the head is flush to the wall surface. (Note: Plastic Anchors provided may not be suitable for all types of wall construction, seek professional help if in doubt).

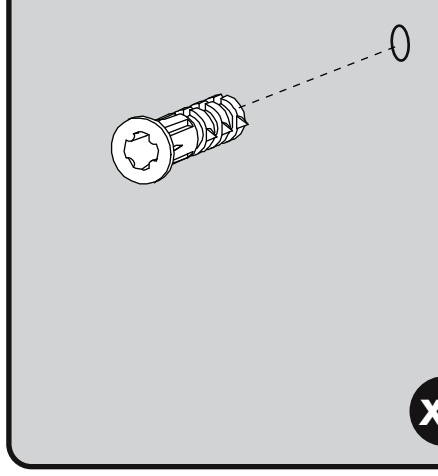

5 Secure Slide Bar Assembly to the wall with the Mounting Screws provided.

6 Re-install End Caps on both ends of Slide Bar assembly.

7 Orient the Hand Held Shower Bracket to your desired position. Adjustments are made by rotating the Handle counter-clockwise to release the position, and clockwise to lock into the desired position.

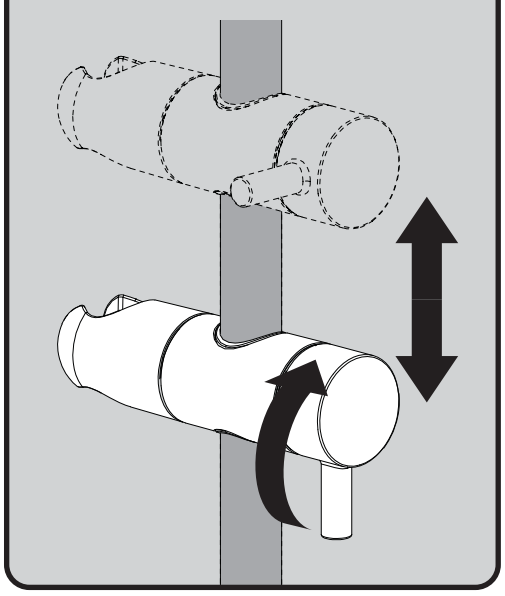

8 Note: If the Hand Shower Holder no longer holds position, Tighten the Screw (1) in the Shower Holder using a Philips Head Screwdriver.

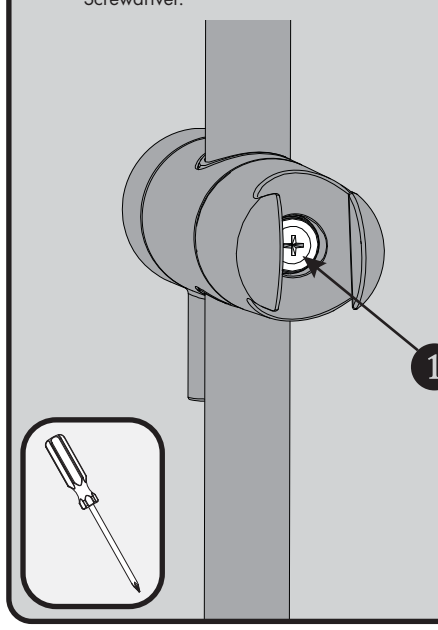

VS-123 / VS-124 REPAIR PARTS

SPEAKMAN®

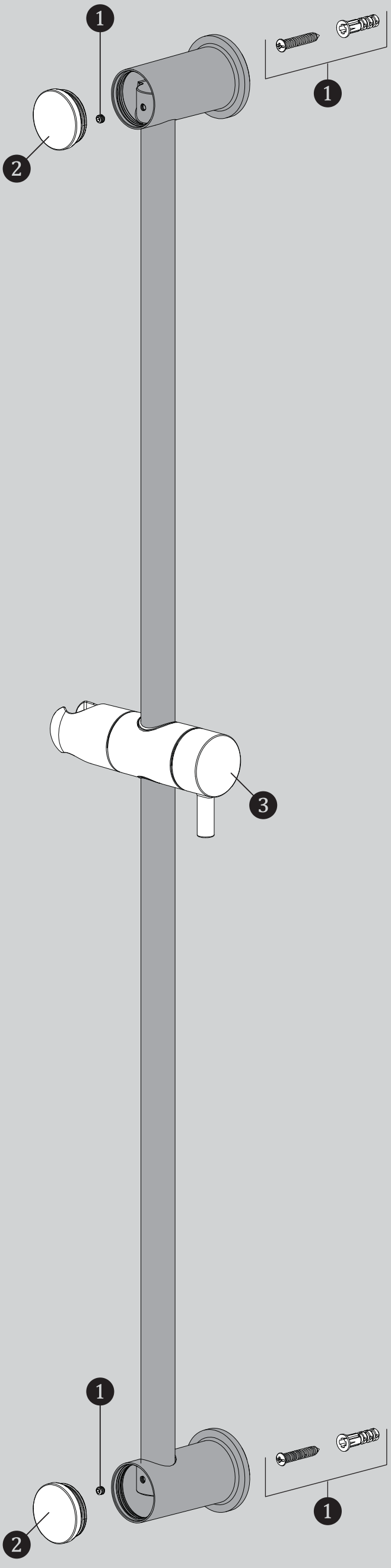

ITEM NO.	PART NO.	DESCRIPTION
1	RPG05-108526	MOUNTING HARDWARE
2	RPG07-108527	END CAP REPAIR GROUP
3	RPG56-108517	HAND SHOWER HOLDER

VS-123 ROUGH-IN DIAGRAM

SPEAKMAN®

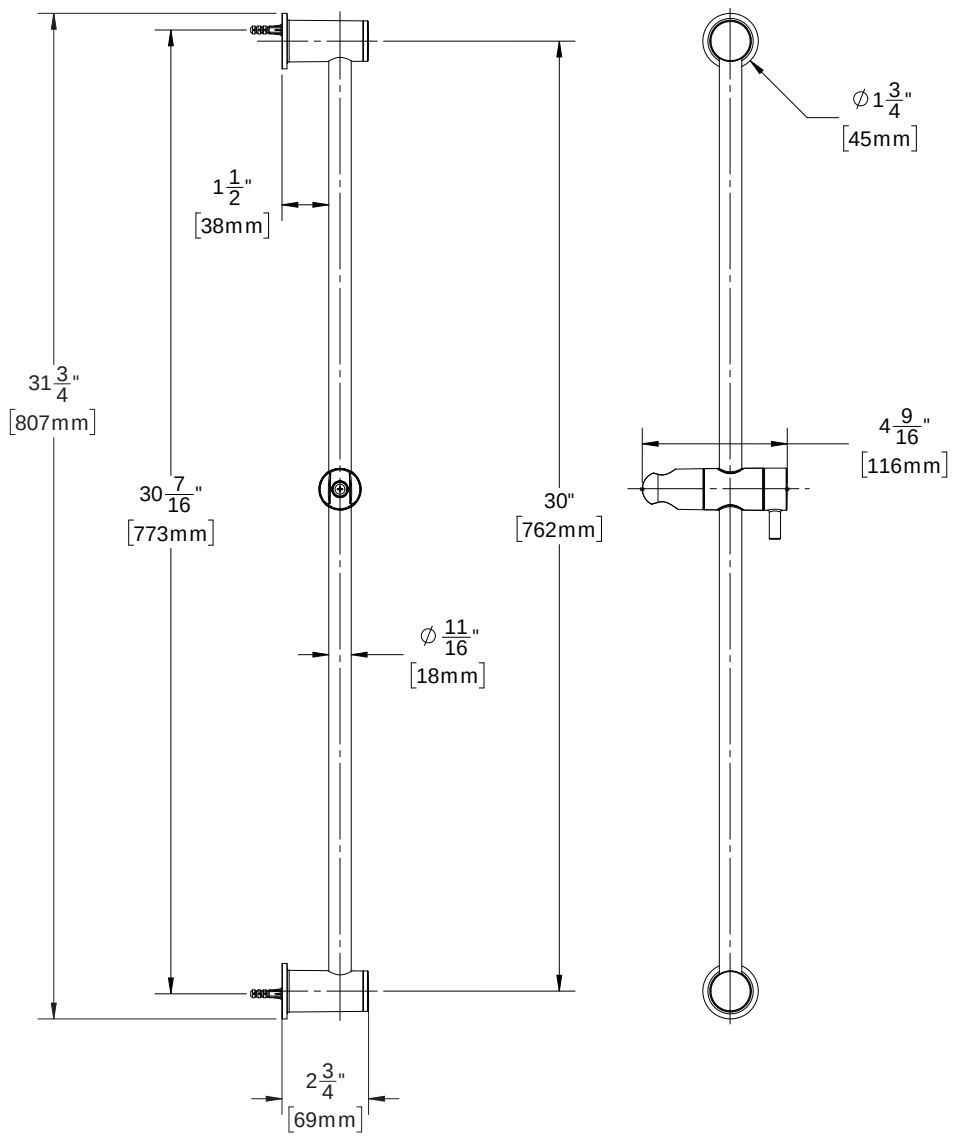

DIMENSIONS SUBJECT TO CHANGE WITHOUT NOTICE.

VS-124 ROUGH-IN DIAGRAM

SPEAKMAN®

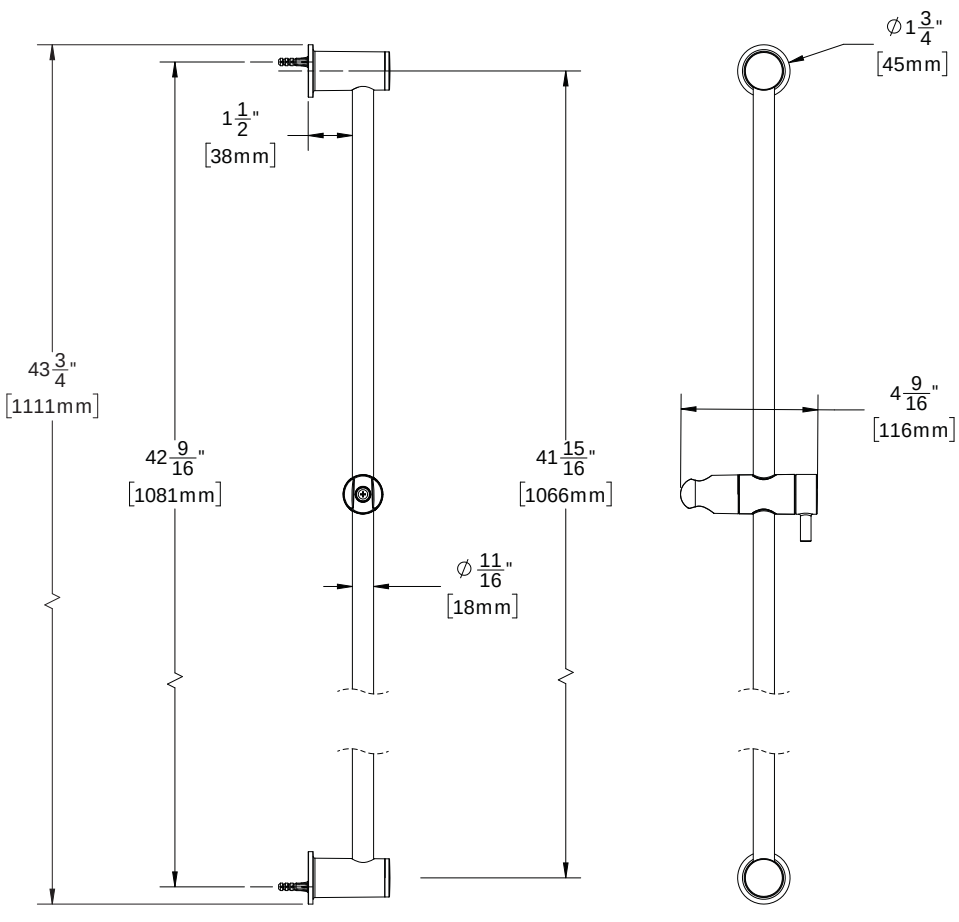

DIMENSIONS SUBJECT TO CHANGE WITHOUT NOTICE.