SE-1155

SPEAKMAN®

Optimus® Pedestal-Mounted Eye and Face Wash Bowl

FEATURES:

- Independent eyewash and face wash integrated into one, multi-functioning safety unit
- (2) Dedicated aerated eyewash sprays & (2) face pads for full face cleansing with flip top dust caps
- Patented rectangular stainless steel bowl
- Stainless steel push handle activation
- 1/2" NPT female stainless steel valve
- 1/2" NPT female inlet
- Integral in-line strainer prevents debris from cloggin spray heads
- 4.9 GPM (18.55 L/min) @ 30 PSI flow rate
- 1-1/4" IPS stainless steel piping pedestal
- Universal emergency sign included



OPTIONS:

- FPV: Freeze protection valve
- HFO: Hand/foot operation
- HS: Hand held drench hose
- ILS: In-line strainer for 1/2" IPS piping
- PT: P-Trap
- SPV: Scald protection valve

ADD-ONS:

- OCV: Optimus® dust cover
- SE-TW-EW: Thermostatic mixing valve

STANDARDS:

- ANSI/ISEA Z358.1 certified

WARRANTY:

Visit www.speakman.com for full product warranty information

- 3 Year Limited Warranty (commercial)

Information continues on next page

ENSURE YOU ARE ANSI/ISEA Z358.1 Tepid Water Complaint by incorporating Speakman's 9.7 GPM Thermostatic Mixing Valve.



- **STW-370:** Thermostatic Mixing Valve (valve only)
- **SE-TW-EW:** Thermostatic Mixing Valve with necessary connections for eye and eye/face wash products

Architect/Engineer Approval Space:

SPEAKMAN
400 ANCHOR MILL ROAD
NEW CASTLE, DE 19720

P: 800-537-2107
F: 800-977-2747
W: WWW.SPEAKMAN.COM
R: 02-AUGUST 2018

SE-1155

SPEAKMAN®

Optimus® Pedestal-Mounted Eye and Face Wash Bowl

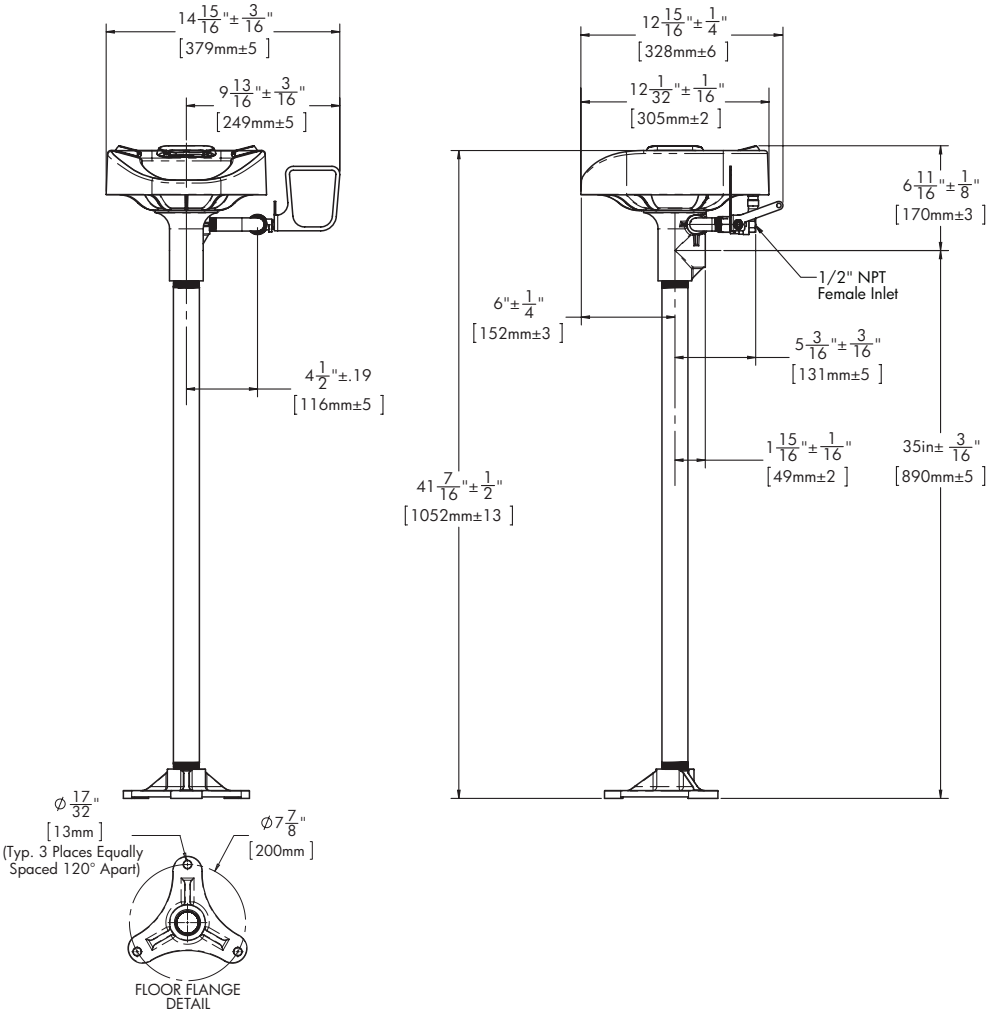

All dimensions are in inches (millimeters) unless otherwise specified and are subject to change without notice.

Pedestal Mount Eye and Face Wash features an independent eye wash and face wash integrated into one, multi-functioning safety unit. The eye wash shall have aerated sprays and the face pads shall provide full face coverage. Each component shall meet performance standards while operating together.

The eye and face wash sprays shall have an integral in-line strainer, automatic flow controls, flip top covers and have a combined minimum flow rate of 4.9 GPM @ 30 PSI. Eyewash shall be activated via a stainless steel push handle.

The pedestal frame shall be stainless steel and shall include an integral drain positioned at 35” from the floor/ground.

Product shall have a 3-year limited warranty and be certified to ANSI Z358.1. Product shall be SPEAKMAN Model SE-1155.

Architect/Engineer Approval Space:

SPEAKMAN
400 ANCHOR MILL ROAD
NEW CASTLE, DE 19720

P: 800-537-2107
F: 800-977-2747
W: WWW.SPEAKMAN.COM
R: 02-AUGUST 2018