SPEAKMAN® SE-572

Laboratory Countertop Mounted Eyewash



FEATURES:

- Countertop mounted
- (2) yellow, plastic, aerated with flip-top dust caps
- ½ in. NPT female brass, chrome-plated valve
- Stainless steel push handle activation
- ½ in. NPT male inlet
- 3.09 gpm @ 30 psi
- Universal emergency sign included

FINISHES:

Chrome

COMPLIANCE:

- Certified to ANSI/ISEA Z358.1

OPTIONS:

Add suffix to model #

- Left hand operation ❑ LH
- In-line strainer for ½ in. IPS piping ❑ ILS

WARRANTY:

- 3 year limited

Architect/Engineer Approval Space:

SPEAKMAN
400 ANCHOR MILL ROAD
NEW CASTLE, DE 19720

P: 800-537-2107
F: 800-977-2747
W: WWW.SPEAKMAN.COM
R: MARCH 2017

DIMENSIONS:

NOTE: 1. All dimensions are in inches (millimeters) unless otherwise specified and are subject to change without notice.

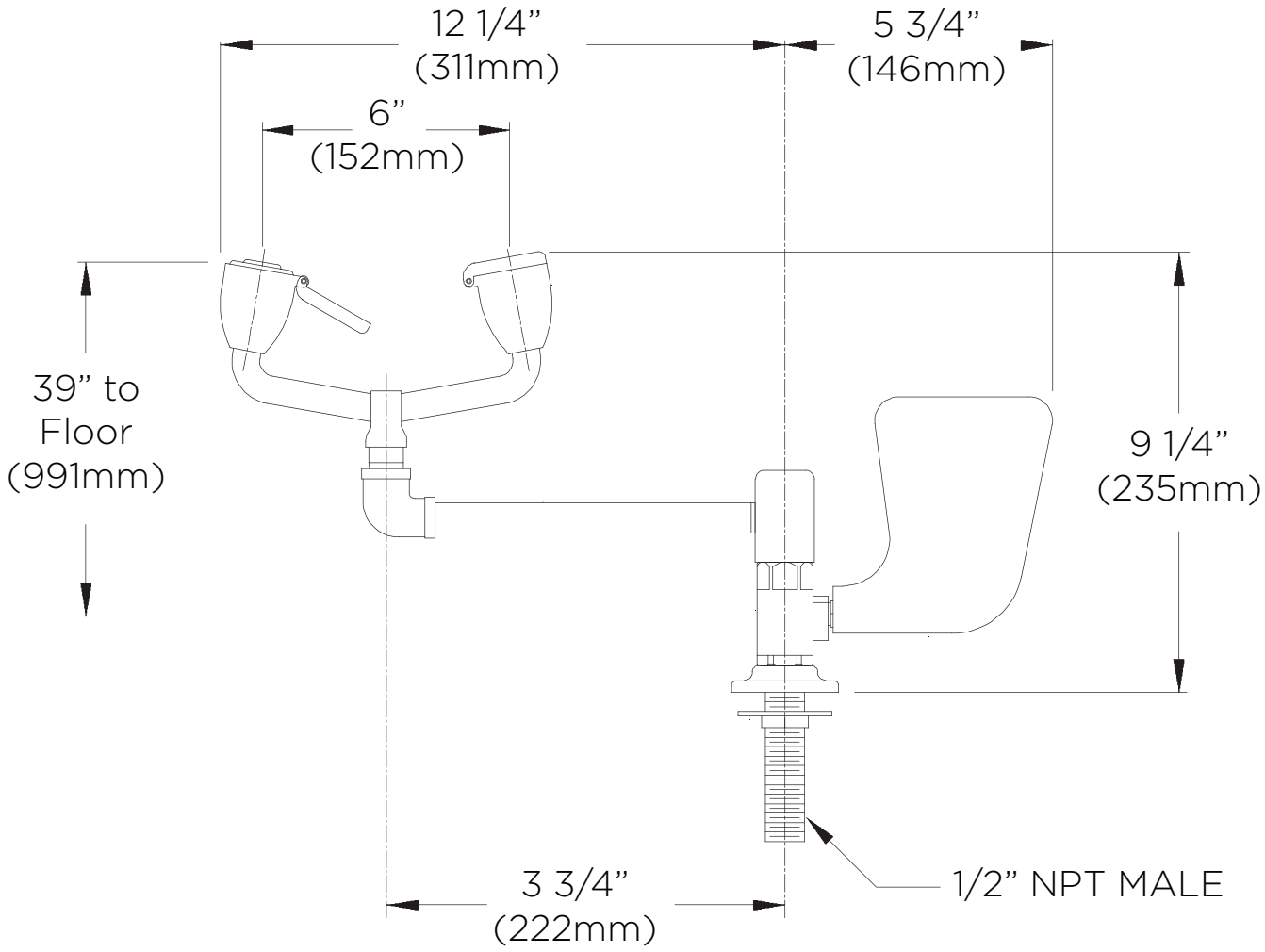

Architect/Engineer Approval Space:

SPEAKMAN
400 ANCHOR MILL ROAD
NEW CASTLE, DE 19720

P: 800-537-2107
F: 800-977-2747
W: WWW.SPEAKMAN.COM
R: MARCH 2017