SEF-1000-CA

SPEAKMAN®

Eyesaver® Classic Laboratory Faucet with Integrated Eyewash

EYEWASH FEATURES:

- Independent water channel for eyewash
- Brass spindle valve
- Pull handle activation
- Aerated yellow plastic spray outlets with integral flow control and flip-top dust caps
- 2.43 GPM (9.2 L/min) @ 30 PSI flow rate
- 1/2" NPT male inlet

FAUCET FEATURES:

- Brass construction with polished chrome finish
- Gooseneck spout with independent water channel for faucet
- 2.2 GPM (8.3 L/min) flow rate
- Inlet supply 3/8" compression with female threads

EYEWASH OPTIONS:

- NA: Non-aerated eyewash outlets

FAUCET OPTIONS:

- 8: 8" Gooseneck spout for faucet
- BO: 0.5 GPM (1.89 L/min) faucet flow control
- FP: foot pedal for faucet operation (Not NSF 61/372 compliant)
- LF: 1.5 GPM (5.7 L/min) laminar faucet flow control
- ST: Serrated tip for faucet with vacuum breaker (Not NSF 61/372 compliant)
- TW: Thermostatic mixing valve for tepid water during eyewash usage

STANDARDS:

- ANSI/ISEA Z358.1 certified
- ASME A112.18.1/CSA B125.1 certified
- IGC 272 certified
- NSF/ANSI 61 certified
- NSF 372 certified

WARRANTY:

Visit www.speakman.com for full product warranty information

- 3 Year Limited Warranty (commercial)



LEAD FREE
UPC
C ®

Information continues on next page

ENSURE YOU ARE ANSI/ISEA Z358.1 Tepid Water Compliant by incorporating Speakman's 9.7 GPM Thermostatic Mixing Valve.



- **-TW OPTION:** Add the -TW suffix to the part number, this product ships complete with the TMV and connections
- **STW-370:** Thermostatic Mixing Valve (valve only)
- **SEF-TW:** Thermostatic Mixing Valve with necessary connections for SEF products

All dimensions are in inches (millimeters) unless otherwise specified and are subject to change without notice.

Architect/Engineer Approval Space:

SPEAKMAN
400 ANCHOR MILL ROAD
NEW CASTLE, DE 19720

P: 800-537-2107
F: 800-977-2747
W: WWW.SPEAKMAN.COM
R:01-JULY 2018

SEF-1000-CA

SPEAKMAN®

Eyesaver® Classic Laboratory Faucet with Integrated Eyewash

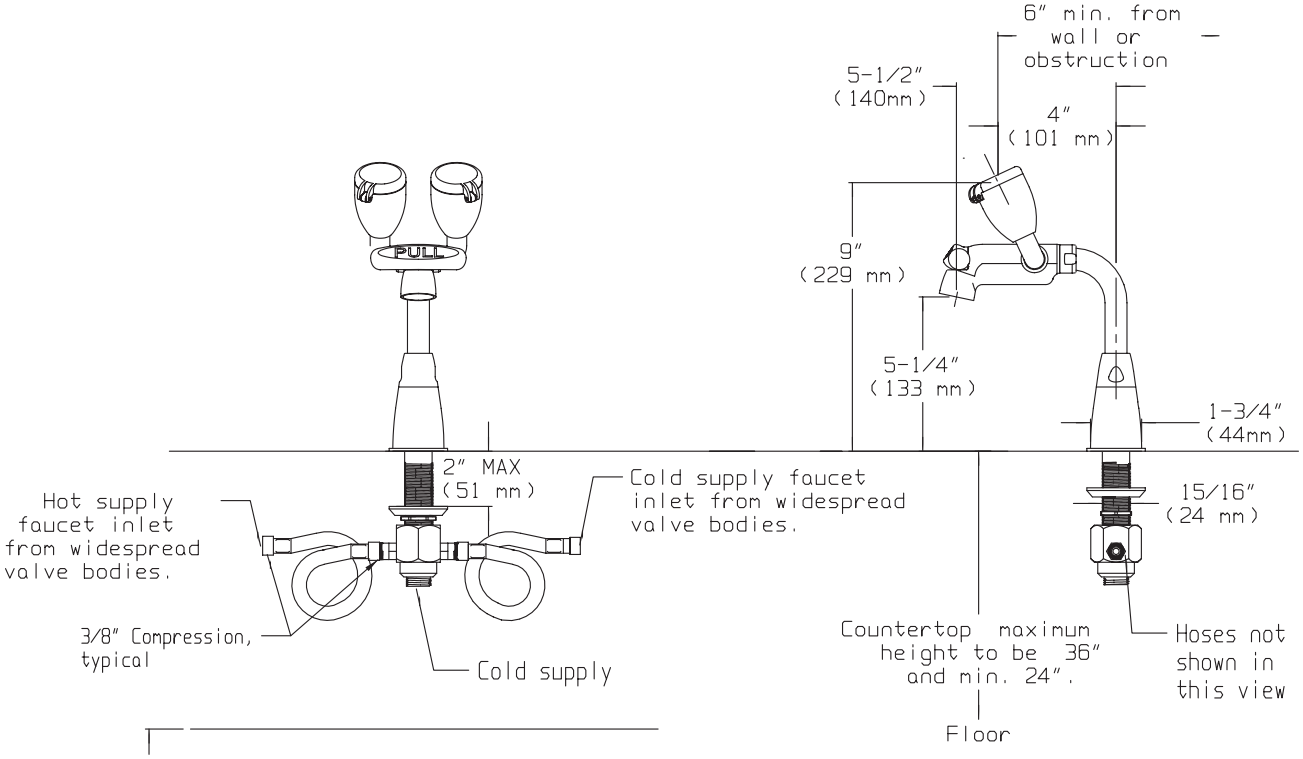

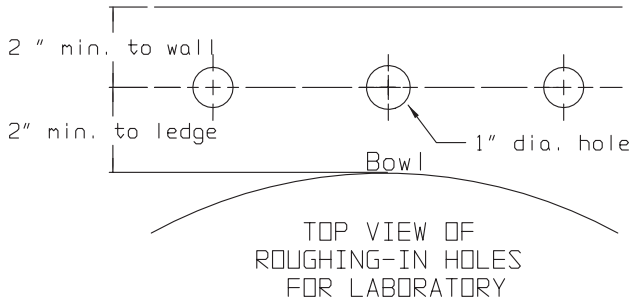

TOP VIEW OF ROUGHING-IN HOLES FOR LABORATORY

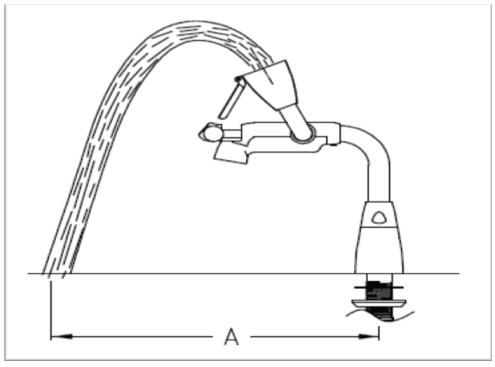

SEF-1000-CA Spray Plume Length and Flow

Flowing Pressure	30 psi	40 psi	50 psi	60 psi	70 psi	80 psi
	2.07 Bar	2.76 Bar	3.45 Bar	4.14 Bar	4.83 Bar	5.52 Bar
Flow Rate	2.9 gpm	3.1 gpm	2.9 gpm	2.9 gpm	2.9 gpm	2.9 gpm
	11.09 L/min	11.55 L/min	11.13 L/min	10.98 L/min	10.90 L/min	10.86 L/min
Eyewash Distance Plume "A"	13.5"	14.25"	14.25"	13.75"	13.75"	13.75"
	34.29 cm	36.2 cm	36.2 cm	34.93 cm	34.93 cm	34.93 cm

SEF-1000-CA-8 Spray Plume Length and Flow

Flowing Pressure	30 psi	40 psi	50 psi	60 psi	70 psi	80 psi
	2.07 Bar	2.76 Bar	3.45 Bar	4.14 Bar	4.83 Bar	5.52 Bar
Flow Rate	2.9 gpm	3.1 gpm	2.9 gpm	2.9 gpm	2.9 gpm	2.9 gpm
	11.09 L/min	11.55 L/min	11.13 L/min	10.98 L/min	10.90 L/min	10.86 L/min
Eyewash Distance Plume "A"	17.0"	18"	17.5"	17.0"	17.0"	17.0"
	43.18 cm	45.72 cm	44.45 cm	43.18 cm	43.18 cm	43.18 cm

All dimensions are in inches (millimeters) unless otherwise specified and are subject to change without notice.

Architect/Engineer Approval Space:

SPEAKMAN
400 ANCHOR MILL ROAD
NEW CASTLE, DE 19720

P: 800-537-2107
F:800-977-2747
W: WWW.SPEAKMAN.COM
R:01-JULY 2018