SE-582

SPEAKMAN®

Wall-Mounted Round Eyewash Bowl

FEATURES:

- (2) aerated yellow plastic spray outlets with integral flow control and flip-top dust caps
- Round stainless steel bowl
- Stainless steel push handle activation
- Chrome plated 1/2" NPT female brass valve
- 1/2" NPT female inlet
- 3.2 GPM (12.1 L/min) @ 30 PSI flow rate
- Cold-rolled steel, DuraJade™ powder coated mounting bracket for durability & enhanced corrosion resistance
- Universal emergency sign included



OPTIONS:

- FPV: Freeze Protection Valve
- HFO: Hand/Foot Operation
- HS: Hand held drench hose
- ILS: In-line strainer for 1/2" IPS piping
- PT: P-Trap
- SPV: Scald Protection Valve
- STW: Thermostatic Mixing Valve

STANDARDS:

- ANSI/ISEA Z358.1 certified

WARRANTY:

Visit www.speakman.com for full product warranty information

- 3 Year Limited Warranty (commercial)

Information continues on next page

ENSURE YOU ARE ANSI/ISEA Z358.1 Tepid Water Compliant by incorporating Speakman's 9.7 GPM Thermostatic Mixing Valve.



- **STW OPTION:** Add the -STW suffix to the part number, this product ships complete with the TMV
- **STW-370:** Thermostatic Mixing Valve (valve only)
- **SE-TW-EW:** Thermostatic Mixing Valve with necessary connections for eye and eye/face wash products

All dimensions are in inches (millimeters) unless otherwise specified and are subject to change without notice.

Architect/Engineer Approval Space:

SPEAKMAN
400 ANCHOR MILL ROAD
NEW CASTLE, DE 19720

P: 800-537-2107
F: 800-977-2747
W: WWW.SPEAKMAN.COM
R: 01-AUGUST 2018

SE-582

SPEAKMAN®

Wall-Mounted Round Eyewash Bowl

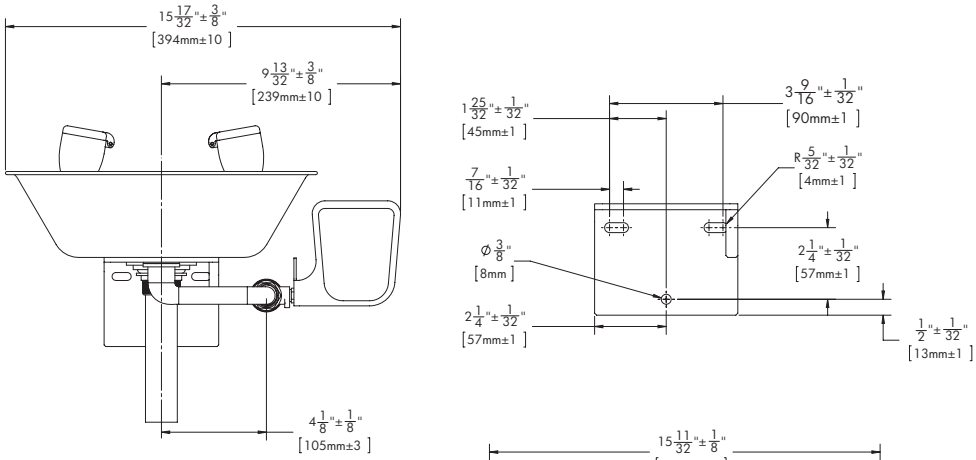

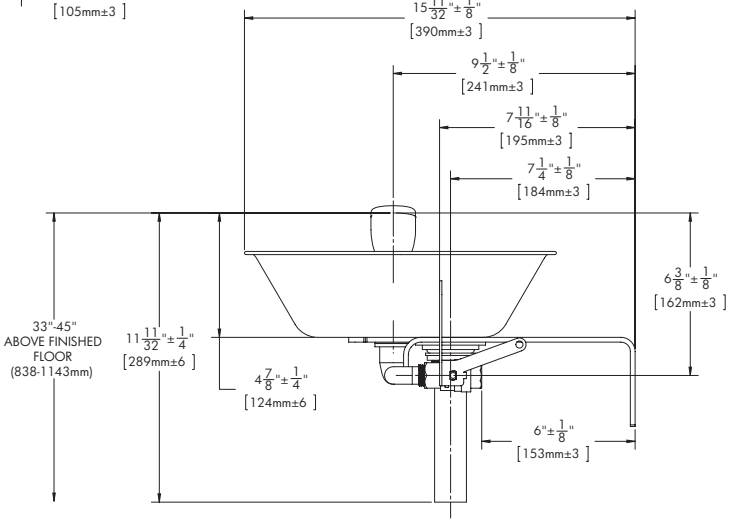

SE-490 with TMV

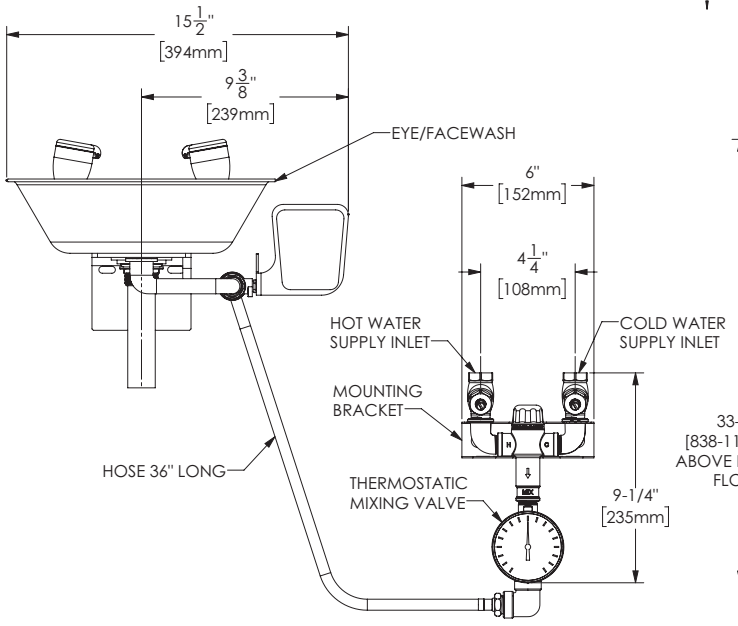

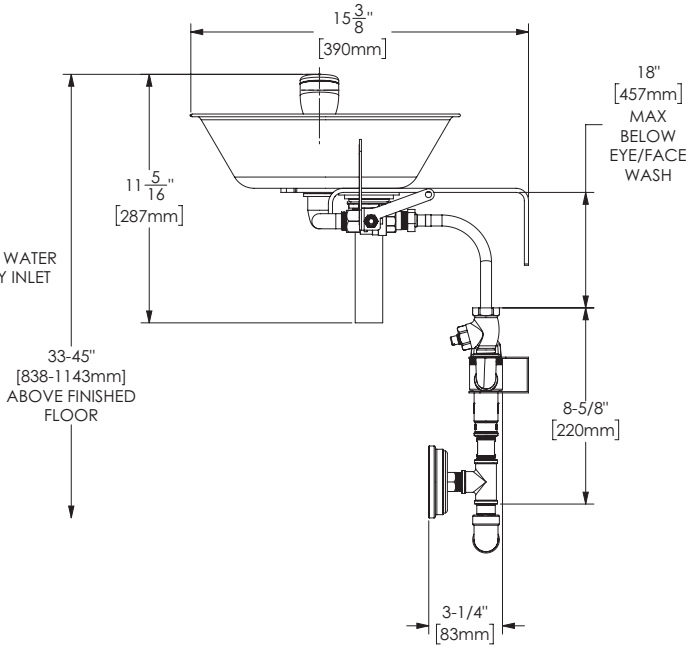

All dimensions are in inches (millimeters) unless otherwise specified and are subject to change without notice.

Architect/Engineer Approval Space:

SPEAKMAN
400 ANCHOR MILL ROAD
NEW CASTLE, DE 19720

P: 800-537-2107
F: 800-977-2747
W: WWW.SPEAKMAN.COM
R: 01-AUGUST 2018