CPT-1001

SPEAKMAN®

Neo™ Pressure Balance Valve Trim

FEATURES:

- Metal lever handle
- Metal trim plate
- Includes mounting plate and hardware

VALVE OPTIONS:

- CPV-PB: Pressure Balance Valve
  Sweat & Thread Connections
- CPV-PB-PXC: Pressure Balance Valve
  PEX F1807 Crimp Inlet Connections
- CPV-PB-PXE: Pressure Balance Valve
  PEX F1960 Cold-Expansion Inlet Connections
- CPV-T: Thermostatic Valve
  Sweat & Thread Connections
- CPV-T-PXC: Thermostatic Valve
  PEX F1807 Crimp Inlet Connections
- CPV-T-PXE: Thermostatic Valve
  PEX F1960 Cold-Expansion Inlet Connections

STOCK FINISH:



PC BN MB

SPECIALTY FINISHES:



BBZ ORB PB PN

STANDARDS:

- ASME A112.18.1/CSA B125.1 certified
- ADA compliant

WARRANTY:

Visit www.speakman.com for full product warranty information

- Limited Lifetime Warranty (consumer)
- 5 Year Limited Warranty (commercial)



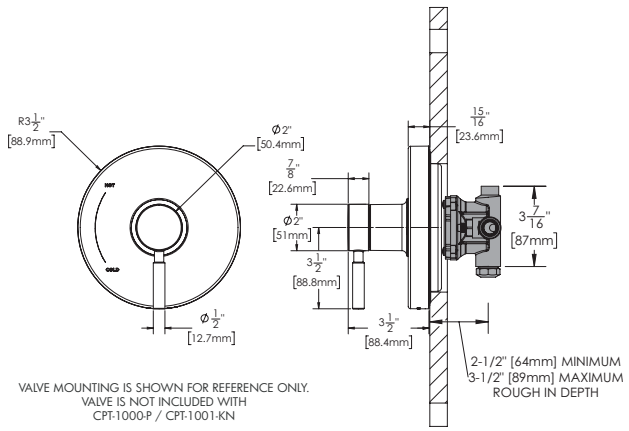

All dimensions are in inches (millimeters) unless otherwise specified and are subject to change without notice.

Architect/Engineer Approval Space:

P: 800-537-2107
F: 800-977-2747
W: WWW.SPEAKMAN.COM
R: 03-MARCH 2019