SPEAKMAN® SEF-1815

Battery Powered 8 in. Deck Plate Faucet with Integrated Eyewash

EYEWASH FEATURES:

- Pull handle activator
- Dedicated water channel for eyewash
- Aerated yellow plastic spray outlets with flip-top dust caps
- 2.9 gpm flow rate at 30 psi.

FAUCET FEATURES:

- ⅜ in. compression connections with male threads for hot and cold inlets
- Sensor battery operated
- 2.2 gpm (8.3 L/min) flow rate
- Under counter mixer
- Manual override valve



COMPLIANCE:

- ANSI/ISEA Z358.1 compliant
- ASME A112.18.1/CSA B125 compliant

OPTIONS: Add suffix to model

• 8 in. gooseneck spout	❑- 8
• Vandal resistant 0.5 gpm flow control	❑ -BO
• Foot pedal activation	❑ -FP
• Laminar flow outlet 1.5 gpm	❑ -LF
• Non-aerated eyewash outlets	❑ -NA
• Serrated tip with vacuum breaker	❑ -ST
• SE-370 Thermostatic mixing valve	❑ -TW

WARRANTY:

- 3 year limited

Architect/Engineer Approval Space:

SPEAKMAN
400 ANCHOR MILL ROAD
NEW CASTLE, DE 19720

P: 800-537-2107
F: 800-977-2747
W: WWW.SPEAKMAN.COM
R: OCTOBER 2016

DIMENSIONS:

NOTE: 1. All dimensions are in inches (millimeters) unless otherwise specified and are subject to change without notice.

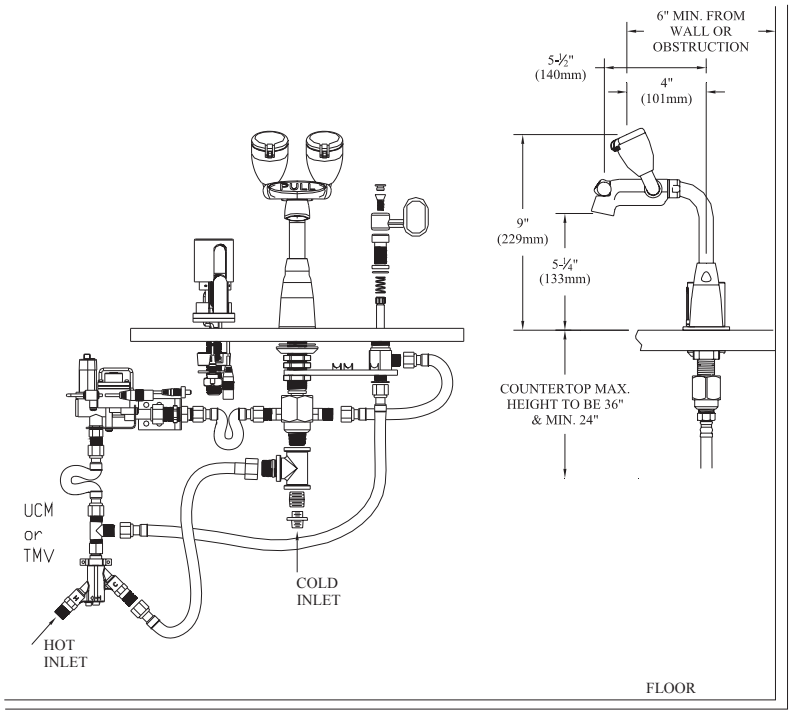

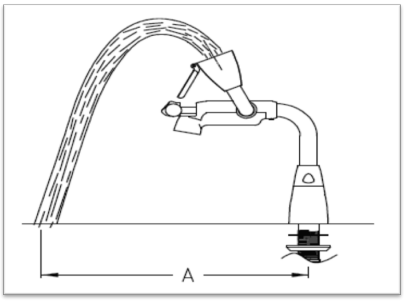

SEF-1815 Spray Plume Length and Flow

Flowing Pressure	30 psi	40 psi	50 psi	60 psi	70 psi	80 psi
	2.07 Bar	2.76 Bar	3.45 Bar	4.14 Bar	4.83 Bar	5.52 Bar
Flow Rate	2.9 gpm	3.1 gpm	2.9 gpm	2.9 gpm	2.9 gpm	2.9 gpm
	11.09 L/min	11.55 L/min	11.13 L/min	10.98 L/min	10.90 L/min	10.86 L/min
Eyewash Distance Plume "A"	13.5"	14.25"	14.25"	13.75"	13.75"	13.75"
	34.29 cm	36.2 cm	36.2 cm	34.93 cm	34.93 cm	34.93 cm

SEF-1815-8 Spray Plume Length and Flow

Flowing Pressure	30 psi	40 psi	50 psi	60 psi	70 psi	80 psi
	2.07 Bar	2.76 Bar	3.45 Bar	4.14 Bar	4.83 Bar	5.52 Bar
Flow Rate	2.9 gpm	3.1 gpm	2.9 gpm	2.9 gpm	2.9 gpm	2.9 gpm
	11.09 L/min	11.55 L/min	11.13 L/min	10.98 L/min	10.90 L/min	10.86 L/min
Eyewash Distance Plume "A"	17.0"	18"	17.5"	17.0"	17.0"	17.0"
	43.18 cm	45.72 cm	44.45 cm	43.18 cm	43.18 cm	43.18 cm

Architect/Engineer Approval Space:

SPEAKMAN
400 ANCHOR MILL ROAD
NEW CASTLE, DE 19720

P: 800-537-2107
F: 800-977-2747
W: WWW.SPEAKMAN.COM
R: OCTOBER 2016