SPEAKMAN® SM-5010

SentinelPro™ Thermostatic/Pressure Balance Shower System

FEATURES:





- Speakman SentinelPro concealed anti-scald thermostatic/pressure balanced shower/bath valve combinations.
- Chrome plated brass wall plate with plastic index.
- Chrome plated metal lever handle.
- Adjustable temperature limit stop (TLS) Factory set @ 110 F°.
- Brass body with integral spring check stops.
- Dual element thermostatic/pressure balancing cartridge.
- Can be installed back to back. Roughing-in template.
- S-2272-E2 showerhead with flow control device reduces flow to a maximum of 2.0 gpm (7.6 L/min)
- S-2500 shower arm and wall flange.
- Four port valve with 1/2 in. female copper sweat inlets and shower outlet.
- 1/2 in. NPT female tub outlet.
- Furnished with 1/2 in. pipe plug.
- Valve construction is forged brass body and glass filled resin bonnet.
- Capacity is 4.0 gpm +/- .25 @ 45 psi (50/50 mix).
- Maximum hot water supply temperature is 185°F minimum hot water supply temperature is 5°F above set point.
- Maximum operating temperature is 125 psig.
- Valve temperature set point is 110°F (based on 115-120°F hot & 55 – 65°F cold).
- Maximum static pressure is 125 psig. minimum flow (for +/-3°F performance) meets 1016 to 1.5 gpm.

FINISH:

PC

COMPLIANCE:

- ASSE 1016 & ASME 112.18.1/CSA B125.1 standards (SM-5000 valve)
- WaterSense certified (S-2272-E2 shower head)

OPTIONS: Add suffix to model

- Less showerhead ❑ -LH
- S-2251 showerhead ❑ -1
- S-2252 showerhead ❑ -2
- S-2253 showerhead ❑ -3
- S-2292 showerhead ❑ -9
- Contractor packs available

WARRANTY:

- Shower head/accessories: 1 year limited
- Valve: 5 year limited

Architect/Engineer Approval Space:

SPEAKMAN
400 ANCHOR MILL ROAD
NEW CASTLE, DE 19720

P: 800-537-2107
F: 800-977-2747
W: WWW.SPEAKMAN.COM
R: MARCH 2017

DIMENSIONS:

NOTE: 1. All dimensions are in inches (millimeters) unless otherwise specified and are subject to change without notice. 2. Unless otherwise specified all inlets and outlets are 1/2" female copper sweat. 3. For ADA mounting locations consult ADAAG, ANSI A117.1, or state regulations.

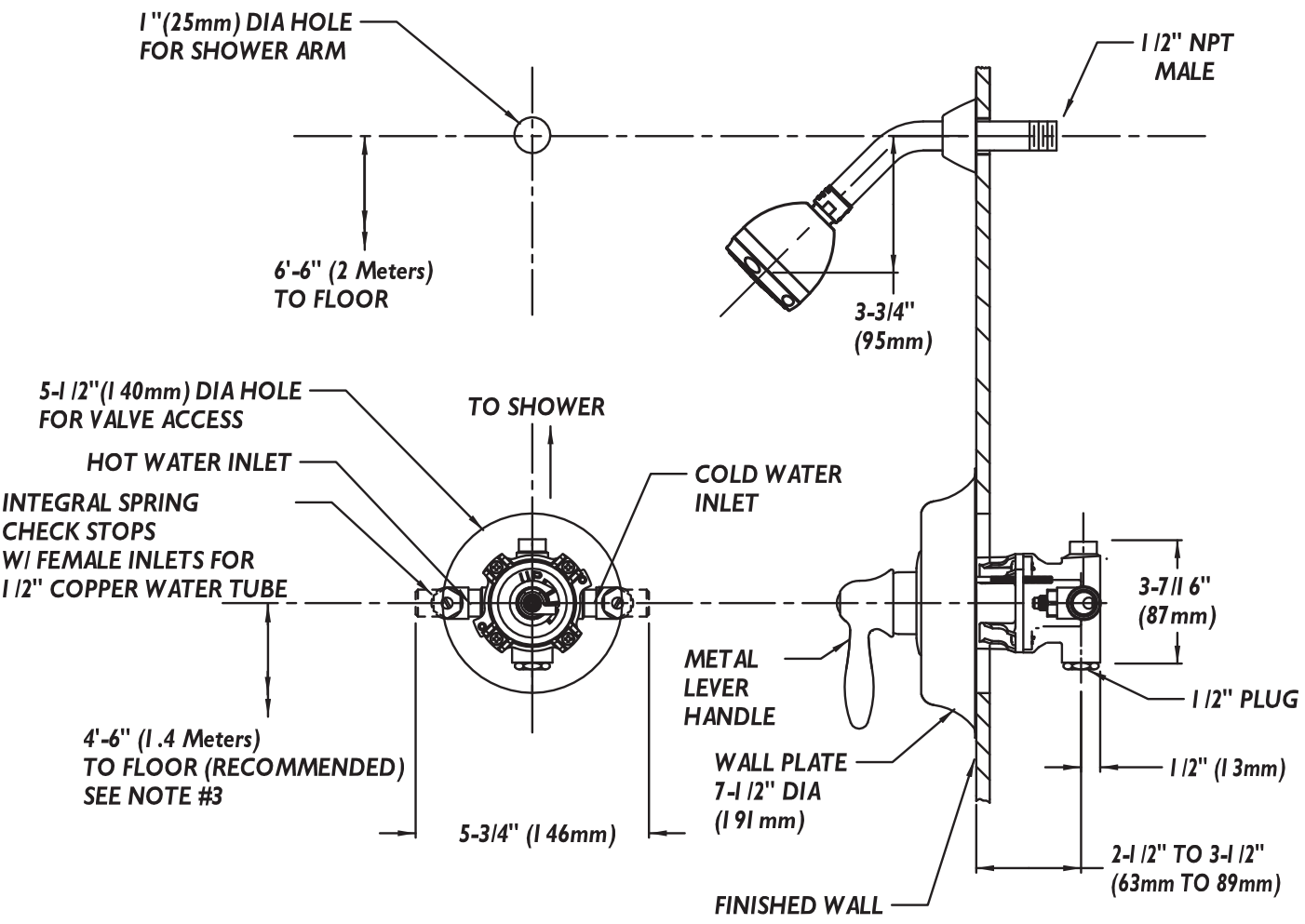

Architect/Engineer Approval Space:

SPEAKMAN
400 ANCHOR MILL ROAD
NEW CASTLE, DE 19720

P: 800-537-2107
F: 800-977-2747
W: WWW.SPEAKMAN.COM
R: MARCH 2017