SB-1004-E

SPEAKMAN®

Neo™ Vessel Sink Lever Faucet

FEATURES:

- 1.2 GPM (4.5 L/min) flow rate
- Brass construction
- Lever handle
- Ceramic cartridge
- Stainless steel inlet supply lines included, with 3/8" compression fittings
- Pop-up drain with lift rod
- Corrosion resistant finishes
- Coordinates with Neo Collection

STOCK FINISHES:



PC BN MB

SPECIALTY FINISHES:



BBZ ORB PB PN

STANDARDS:

- ASME A112.18.1/CSA B125.1 certified
- NSF/ANSI 61 certified
- NSF 372 certified
- WaterSense certified

WARRANTY:

Visit www.speakman.com for full product warranty information

- Limited Lifetime Warranty (consumer)
- 5 Year Limited Warranty (commercial)



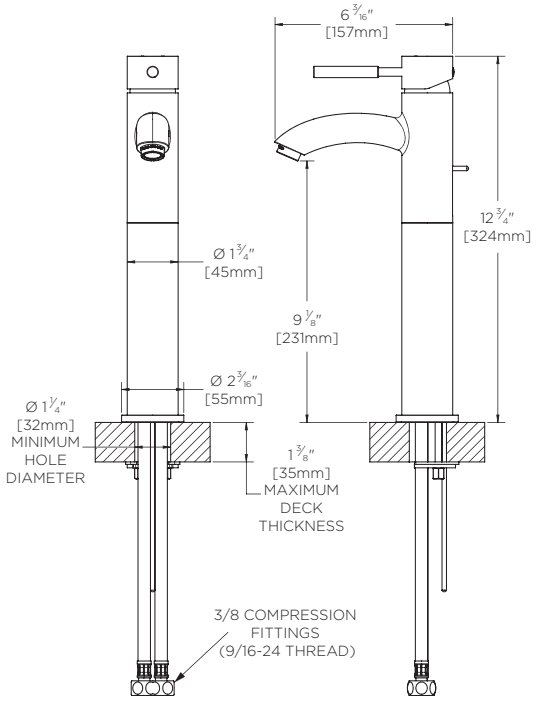

1. All dimensions are in inches (millimeters) unless otherwise specified and are subject to change without notice.

Architect/Engineer Approval Space:

P: 800-537-2107
F: 800-977-2747
W: WWW.SPEAKMAN.COM
R: 02-MARCH 2019