Gravityflo® Portable Eyewash

MODELS:

- ❑ SE-4300: Gravityflo® portable eyewash
- ❑ SE-4380: Gravityflo® portable eyewash includes SE-4360 transportation cart

FEATURES:

- 20 gallon capacity tank, high density molded polyethelene
- Includes a side drench hose (SE-4920)
- Molded plastic spray outlets
- Elastometric pull strap activator
- Shelf or wall mount (bracket included)
- Plastic fill cap with integral tamper prevention
- Integral ½ in. NHT fitting for attachment of drench hose or to drain the unit for cleaning
- Integral basin drain with 1/2 in. NHT fitting
- Integral eyewash sign included
- Unit exceeds the minimum 0.4 gpm for 15 minutes as stated by ANSI

OPTION:

- ❑ SE-4360 transportation cart

COMPLIANCE:

- Certified to ANSI/ISEA Z358.1

WARRANTY:

- 3 year limited



SE-4300

Architect/Engineer Approval Space:

SPEAKMAN
400 ANCHOR MILL ROAD
NEW CASTLE, DE 19720

P: 800-537-2107
F: 800-977-2747
W: WWW.SPEAKMAN.COM
R: JANUARY 2017

DIMENSIONS:

NOTE: 1. All dimensions are in inches (millimeters) unless otherwise specified and are subject to change without notice.

SE-4300

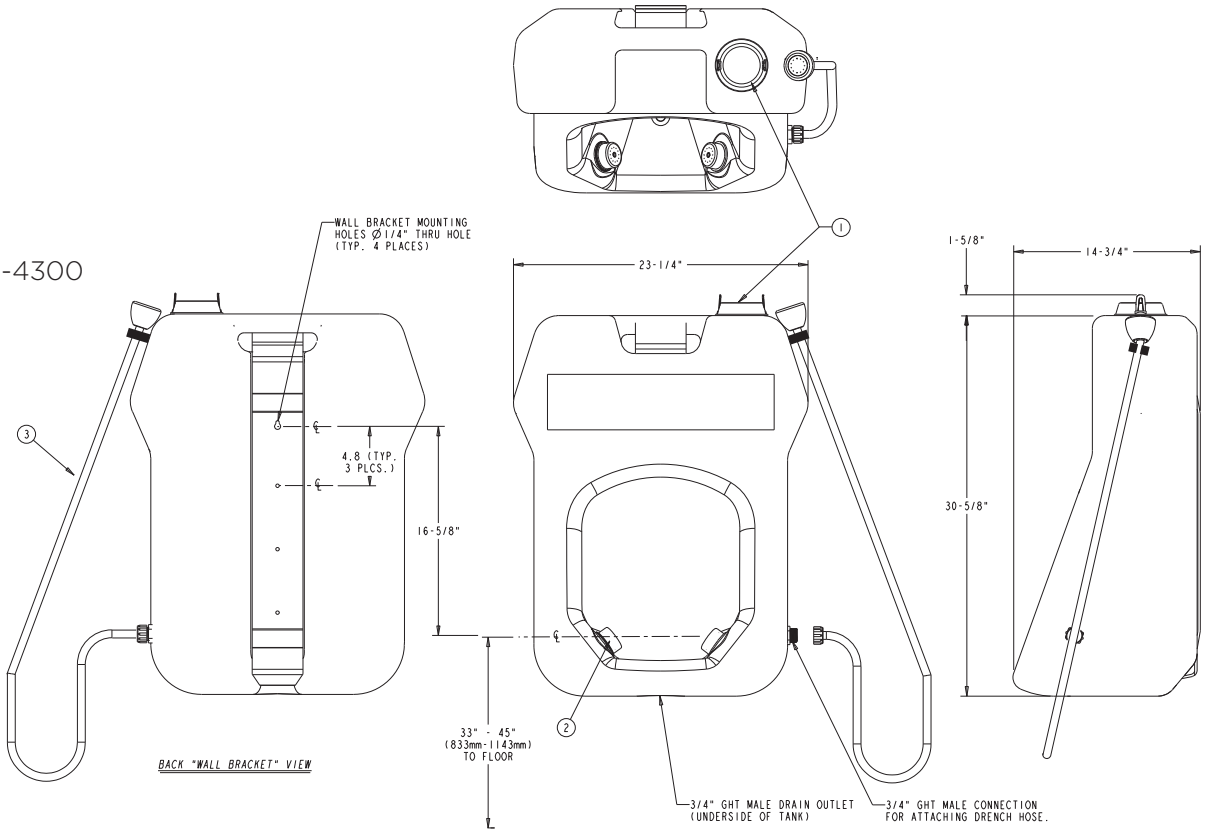

Architect/Engineer Approval Space:

SPEAKMAN
400 ANCHOR MILL ROAD
NEW CASTLE, DE 19720

P: 800-537-2107
F: 800-977-2747
W: WWW.SPEAKMAN.COM
R: JANUARY 2017