# Spears® Technical Information

08-Sep-21 08:58:35 PM

**Part No:** YS3BS8-012CLSR **Filters & Strainers** **Y-Strainers**

**Desc:** 1-1/4 PVC CL T/U Y STRAINER SRFPT FKM S8

**MSRP:** 685.93 **Part Code:** 103

**Weight(lbs):** 2.064 **Weight(kg):** 0.936 **Weight(gm):** 936

**Size:** **Color:** CLEAR **Material:** PVC

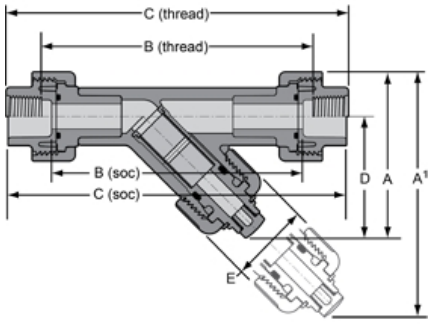


| | |
|---|---|
| **Connection** | SR Fipt - True Union |
| **O-Ring** | FKM |
| **Mesh Sieve** | # 8 |
| **Body Color** | Clear |

**E** = 2-13/16 **A** = 5-13/16 **A1** = 8-5/8 **B** = 6-3/16 **C** = 10-1/8

**D** = 4-1/4

## Injection Molded Dimension References:

G = (LAYING LENGTH) intersection of center lines to bottom of socket/thread; 90° elbows, tees, crosses; ± 1/32 inch.

H = Intersection of center lines to face of fitting; 90° elbows tees, crosses; ± 1/32 inch.

J = Intersection of center lines to bottom of socket/thread; 45° elbows; ± 1/32 inch

L = Overall length of fittings; ± 1/16 inch.

M = Outside diameter of socket/thread hub; ± 1/16 inch.

N = Socket bottom to socket bottom; couplings; ± 1/16 inch.

W = Height of cap; ± 1/16 inch

## Typical Molded Dimension References

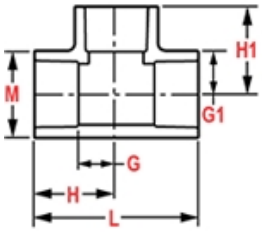


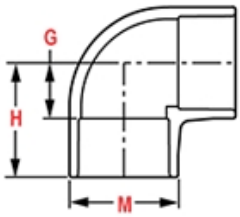


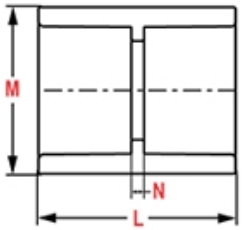


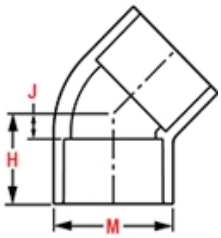


The information printed here is based on current information & product design at the time of publication and is subject to change without notification. Spears® ongoing commitment to product improvement may result in some variation. No representation, guarantees or warranties of any kind are as to its accuracy, suitability for particular application or results to be obtained thereform. For verification of technical data or additional information, please contact Spears® Technical Service Department :: WEST COAST : (818) 364-1611 - EAST COAST : (717) 938-9006