SB-1711-E

SPEAKMAN®

Chelsea™ Centerset Faucet

FEATURES:

- 1.2 GPM (4.5 L/min) flow rate
- Brass construction
- Lever handles
- 1/4 turn ceramic cartridge
- Inlet supply lines not included, accepts 1/2" NPSM to 3/8" compression supply lines
- Pop-up drain with lift rod
- Corrosion resistant finishes
- Coordinates with Chelsea Collection



STOCK FINISHES:



PC BN

STANDARDS:

- ASME A112.18.1/CSA B125.1 certified
- NSF/ANSI 61 certified
- NSF 372 certified
- WaterSense certified
- ADA compliant

WARRANTY:

Visit www.speakman.com for full product warranty information

- Limited Lifetime Warranty (consumer)
- 5 Year Limited Warranty (commercial)

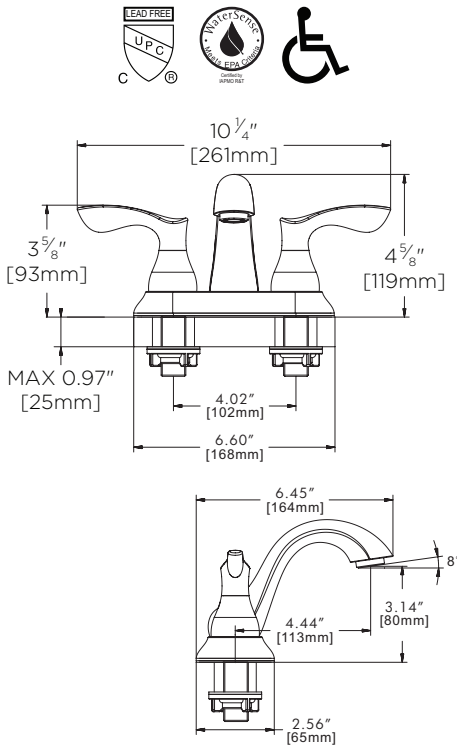

1. All dimensions are in inches (millimeters) unless otherwise specified and are subject to change without notice.

Architect/Engineer Approval Space:

SPEAKMAN
400 ANCHOR MILL ROAD
NEW CASTLE, DE 19720

P: 800-537-2107
F: 800-977-2747
W: WWW.SPEAKMAN.COM
R: 01-APRIL 2018