SE-573

SPEAKMAN®

Optimus® Laboratory Deck-Mounted Eyewash

MODELS:

- ❑ SE-573: 16 in. Arm. ADA Compliant
- ❑ SE-573-SD: 10 in. Arm

FEATURES:

- Deck-mounted
- (2) Aerated Optimus spray heads with integrated dust caps
- Brass, chrome-plated valve
- Swing activated
- ½ in. NPT male inlet
- 2.4 gpm @ 30 psi
- Universal emergency sign included



SE-573

STOCK FINISHES:



PC

OPTIONS:

- ILS: In-line strainer for 1/2” IPS piping



SE-573-SD

STANDARDS:

- ANSI/ISEA Z358.1 certified

WARRANTY:

Visit www.speakman.com for full product warranty information

- 3 Year Limited Warranty (commercial)

Information continues on next page

All dimensions are in inches (millimeters) unless otherwise specified and are subject to change without notice.

Architect/Engineer Approval Space:

P: 800-537-2107
F: 800-977-2747
W: WWW.SPEAKMAN.COM
R: 01-AUGUST 2018

Optimus® Laboratory Deck-Mounted Eyewash

SE-573

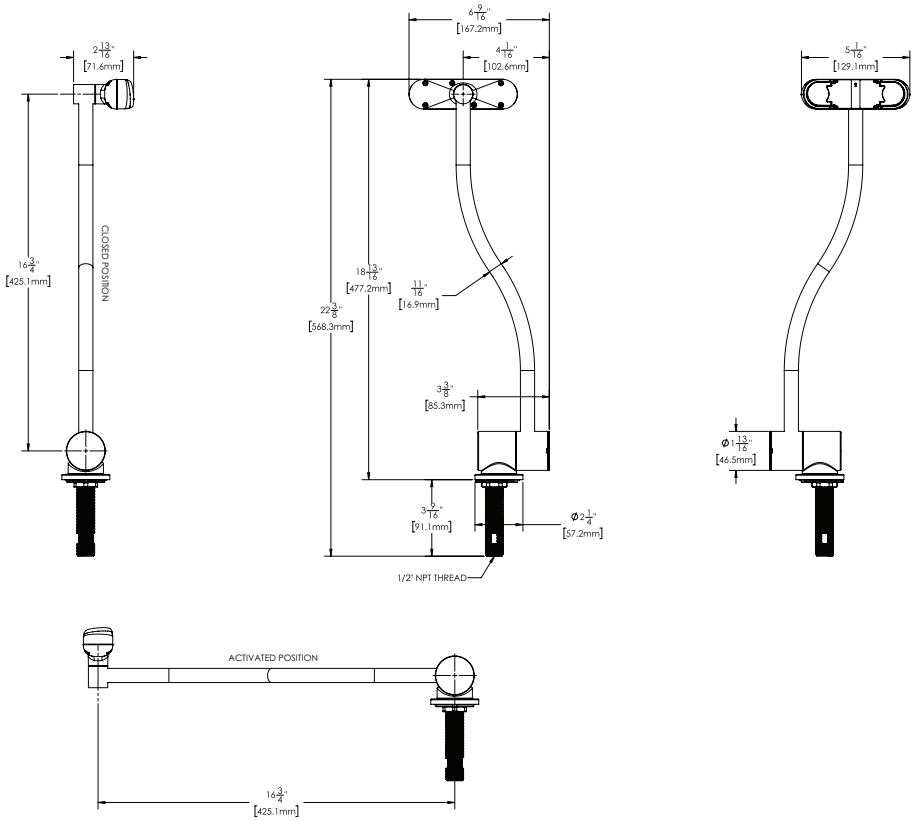

SE-573-SD

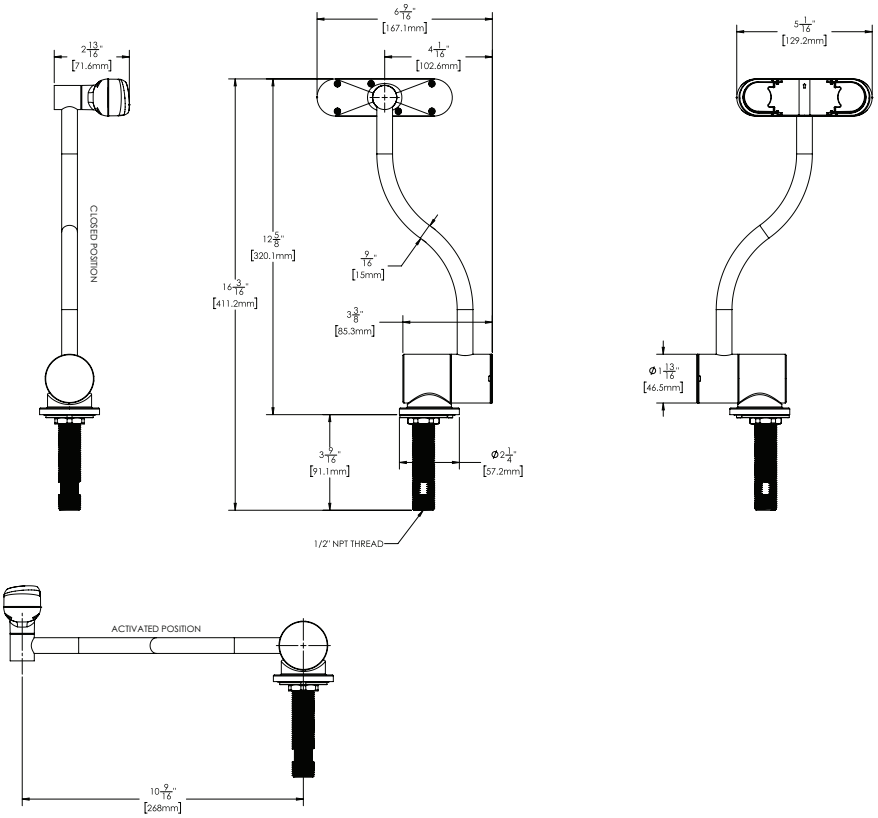

All dimensions are in inches (millimeters) unless otherwise specified and are subject to change without notice.

Architect/Engineer Approval Space:

P: 800-537-2107
F: 800-977-2747
W: WWW.SPEAKMAN.COM
R: 01-AUGUST 2018