Spears® Technical Information

29-Aug-21 04:12:29 AM

Part No: YS2BP8-012SR **Filters & Strainers** **Y-Strainers**

Desc: 1-1/4 PVC T/U Y STRAINER SRFPT EPDM P8M

MSRP: 349 **Part Code:** 102

Weight(lbs): 2.002 **Weight(kg):** 0.908 **Weight(gm):** 908

Size: 1-1/4 **Color:** GRAY **Material:** PVC

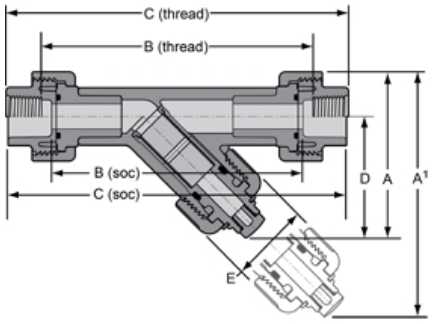

Connection	SR Fipt - True Union
O-Ring	EPDM
Mesh Sieve	# 8
Body Color	Gray

D = 4-1/4 **E** = 2-13/16 **A** = 5-13/16 **A1** = 8-5/8 **B** = 6-3/16

C = 10-1/8

Injection Molded Dimension References:

G = (LAYING LENGTH) intersection of center lines to bottom of socket/thread; 90° elbows, tees, crosses; ± 1/32 inch.

H = Intersection of center lines to face of fitting; 90° elbows tees, crosses; ± 1/32 inch.

J = Intersection of center lines to bottom of socket/thread; 45° elbows; ± 1/32 inch

L = Overall length of fittings; ± 1/16 inch.

M = Outside diameter of socket/thread hub; ± 1/16 inch.

N = Socket bottom to socket bottom; couplings; ± 1/16 inch.

W = Height of cap; ± 1/16 inch

Typical Molded Dimension References

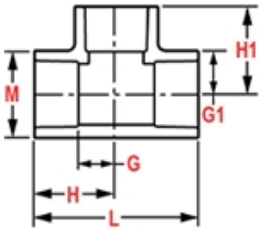

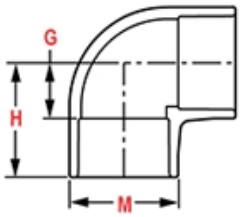

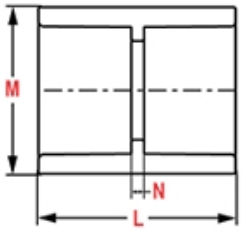

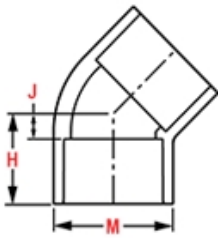

The information printed here is based on current information & product design at the time of publication and is subject to change without notification. Spears® ongoing commitment to product improvement may result in some variation. No representation, guarantees or warranties of any kind are as to its accuracy, suitability for particular application or results to be obtained thereform. For verification of technical data or additional information, please contact Spears® Technical Service Department :: WEST COAST : (818) 364-1611 - EAST COAST : (717) 938-9006