SF-Series Faucet
SF-2250-4 0.35 GPM

▶ Code Number
3362173

▶ Description
Sensor Activated, Electronic, Gooseneck Hand Washing Faucet for tempered or hot/cold water operation.

▶ Flow Rates
0.35 gpm/1.3 Lpm Multi-Laminar

▶ Specifications
ADA Compliant, Sensor Activated, 6 VDC, Chrome Plated Brass, Gooseneck Hand Washing Faucet with the following features:

- Splash-proof Circuit Control Module
- Filtered Solenoid Valve with serviceable Strainer Filter
- Includes appropriate Mounting Hardware
- Adjustable Infrared Sensor Range
- 36" (914 mm) Long Sensor Cable
- 24" (610 mm) Long Flex Hose
- Includes Four (4) AA-size Batteries
- Trim Plate Kit for 4" (102 mm) Centerset Sink
- 6 VDC Plug-in Adapter (Model SF-2200 only)
- Laminar Spray Head



▶ Automatic Operation
The Sloan SF-2200 and SF-2250 Electronic Gooseneck Hand Washing Faucets operate by means of an infrared sensor. When the user enters the sensor's effective range, the Solenoid activates the water flow. Tempered water flows from the Faucet until the user steps away. The Faucet then automatically shuts off.

▶ Hygienic
The ultimate in sanitary protection — there are no handles to turn or buttons to push. Helps to control the spread of infectious diseases.

▶ Economical
Automatic operation provides energy savings. Reduces maintenance and operating costs. Designed for quick and easy installation.

▶ Compliance & Certifications
ASME A112.18.1 and CSA B125.1

LOW-LEAD UPC C ®

0.25 GPC

This space for Architect/Engineer Approval

SLOAN 10500 SEYMOUR AVE. ● FRANKLIN PARK, ● IL. 60131
Ph: 1-800-9-VALVE-9 or 1-847-671-4300 ● Fax: 1-800-447-8329 or 1-847-671-4380 ● http://www.sloan.com

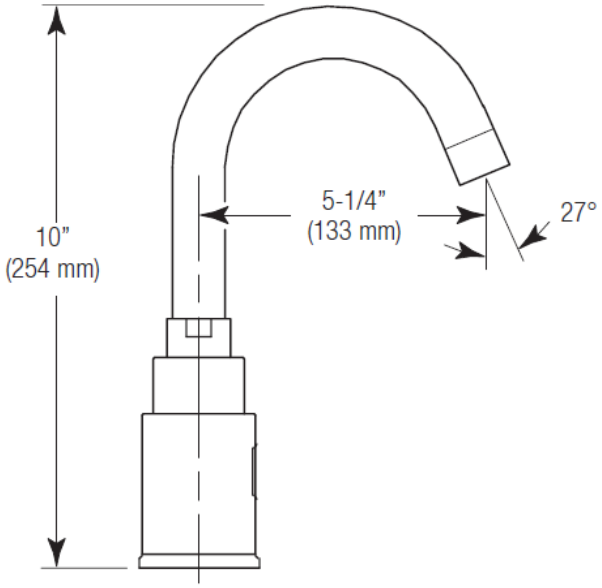

▶ ELECTRICAL SPECIFICATIONS

Control Circuit
- 6 VDC Input/Output

Time Out Setting
- Adjustable time-out setting of 10 or 30 seconds

Adapter
- 6 VDC Plug-in (Model 2200 only)

Battery Life
- Four (4) Alkaline AA Batteries 2 years at 8,000 cycles/month

Solenoid Valve
- 6 VDC, Serviceable Strainer, 3/8" Compression Inlet, 1/2" NPSM Outlet

Sensor Range
- Nominal: 4"-7" (102 mm-179 mm)

▶ OPERATION

1. When a user's hands enter the sensing range, water flows from the spout.



2. When hands are removed, the water flow stops.



▶ ROUGH-IN

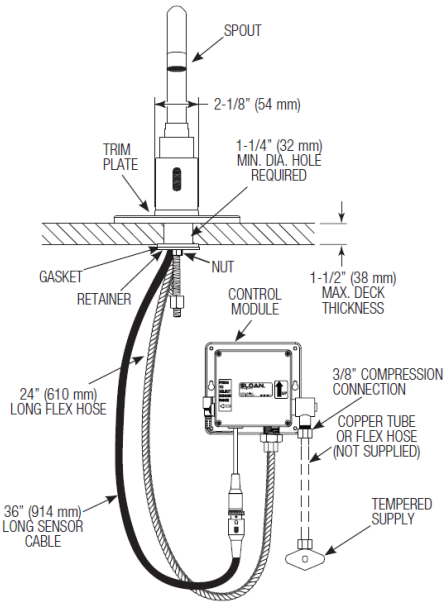

HOT AND COLD WATER SUPPLY APPLICATIONS
(SPECIFY IN MODEL VARIATION)

