EBF-615-4-TUR-TEE-CP-1.5GPM-MLM-IR-BT-FCT

CODE NUMBER

3315340BT

DESCRIPTION

4" Trim Plate, Battery + Turbine Power Supply, Back-Check Tee, Polished Chrome Finish, 1.5 gpm, Multi-Laminar Spray, Infrared Sensor, Smart Faucet, Optima® Battery-Powered Deck-Mounted Low Body Faucet.

DETAILS

- Flow Rate: 1.5 gpm (6 Lpm) (1.5GPM)
- Spray Type: Multi-Laminar (MLM)
- Sensor Type: Infrared (IR)
- Mounting Type: Single Hole
- Trim Plate: 4" (102mm) (4)
- Power Supply: Battery + Turbine (TUR)
- Temperature Mixer: Back-Check Tee (TEE)
- Finish: Polished Chrome (CP)
- Factory Default Timeout: 30s
- Factory Default GPC: 0.75

FEATURES

Commercial Grade Faucet, ADA Compliant, Cast Brass Spout, Quick Connect Fittings, Integrated Water Shut-off, Wireless Settings Adjustment, On-demand or Metered activation, Hygienic Line Flush, Water Usage and Battery Strength Reporting, Self-adapting Sensor

ELECTRICAL SPECIFICATIONS

- Battery Life: 3 years 8,000 cycles/month
  - Optional power harvesting significantly extends service life
- Self-Adjustment Range: 1"–14" (25–356mm)
- Sensor Range: 4"–5" (102–127mm)
- Timeout Adjustment Settings: 30s

POWER SUPPLY OPTIONS

- 6VDC Plug Adapter (sold separately)*
- 6VDC Ganged Adapter Kit (up to 6 units)(sold separately)*
- 24VAC Box Transformer (up to 3 units)(sold separately)*
- Optional Turbine Energy Harvesting

* when converting units to hardwired with battery back-up

VIDEOS

- Optima Faucet App
- Sloan Optima Below Deck Faucet

DOWNLOADS

- Optima Smart Faucet Below Deck Installation Instructions
- Faucet Spray Heads Repair and Maintenance Guide
- ETF-610/EBF-615 Below Deck Repair and Maintenance Guide
- Additional Downloads



Variation not shown: 4" Trim Plate

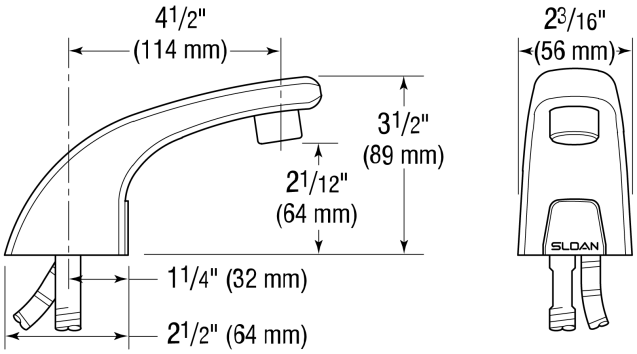

COMPLIANCES & CERTIFICATIONS

(ADA Compliant, ASME A112.18.1 Compliant, CEC Compliant, cUPC Certified, cUPC Low Lead Compliant, Proposition 65, TAS, UPC Certified, UPC Low Lead Compliant, WaterSense Listed)

RECOMMENDED SPECIFICATION

Faucet shall include cast brass body, quick-connect fittings, twist-off/shut-off solenoid assembly, removable battery cartridge, flexible power supply and allow adjustment of settings wirelessly via Apple or Android smartphones.

NOTES

All information contained within this document subject to change without notice.

Looking for other variations of the EBF-615 product? View the general spec sheet with all options.

Find a matching soap dispenser for this faucet.
Find a compatible sink for this faucet.

Sloan 10500 Seymour Ave, Franklin Park, IL 60131
Phone: 800.982.5839 • Fax: 800.447.8329 • sloan.com

WARRANTY

3 Year

ROUGH-IN

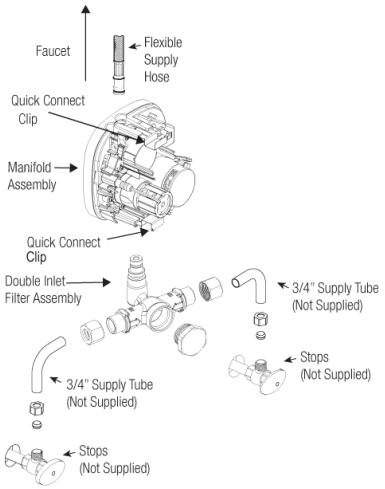

Double Inlet Filter Fitting

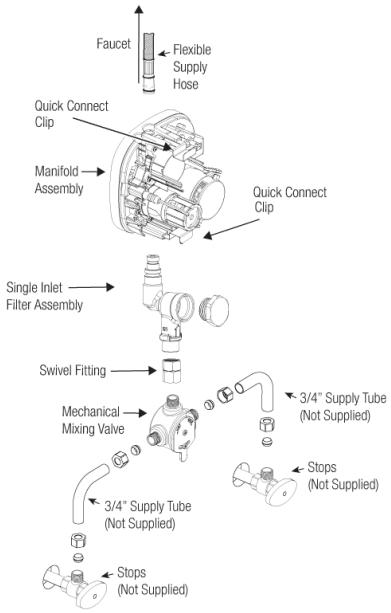

Single Inlet Filter Fitting Kit with Below Deck Manual Mixing Valve (BDM)

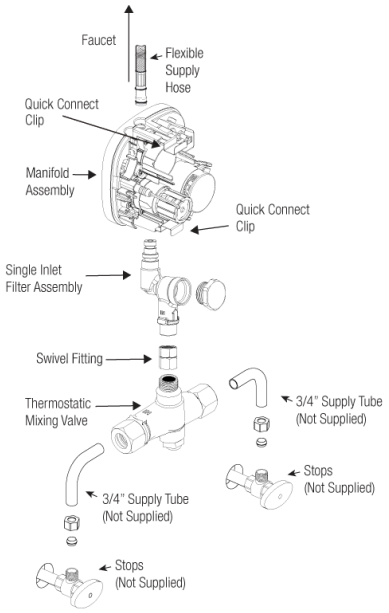

Single Inlet Filter Fitting Kit with Below Deck Thermostatic Mixing Valve (BDT)

Sloan 10500 Seymour Ave, Franklin Park, IL 60131
Phone: 800.982.5839 • Fax: 800.447.8329 • sloan.com