EAF-100-HLT-CP-1.5GPM-AER-IR-IQ-BTA-FCT

(General Model Name: EAF100-LT CP ELECT FCT (IQ))

CODE NUMBER

3335012

DESCRIPTION

Hardwired Less Transformer Power Supply, Mixer Not Included, Polished Chrome Finish, 1.5 gpm, Aerated Spray, Infrared Sensor, Bluetooth AdapterSmart Faucet, Optima® Hardwired-Powered Deck-Mounted Mid Body Faucet.

DETAILS

- Flow Rate: 1.5 gpm (6 Lpm) (1.5GPM)
- Spray Type: Aerated (AER)
- Sensor Type: Infrared (IR)
- Mounting Type: Single Hole
- Power Supply: Hardwired Less Transformer (HLT)
- Temperature Mixer: Mixer Not Included
- Finish: Polished Chrome (CP)
- Factory Default Timeout: 30s
- Factory Default GPC: 0.75

FEATURES

Commercial Grade, ADA Compliant, Electronic, Sensor-Activated, Cast Brass Hand Washing Faucet with the following features:

- Double Infrared Sensors with Automatic Setup and Indicator Light
- Automatic Self-adapting Sensor Technology
- Magnetic Solenoid Valve
- Water Supply Connection with Flexible High-pressure Hose and Strainer
- 6 Volt DC Plug-in Adapter (must be ordered separately for Less transformer (-LT) faucets)
- Daisy Chain Electrical Splitter Cable included with Less transformer (-LT) faucets
- Appropriate Mounting Hardware included
- Optional 24 Hour Sentinel Activation
- IQ-Click feature permits activation of continuous run and temporary off modes
- Includes EAF44 Power Splitter

ELECTRICAL SPECIFICATIONS

- Battery Life: 3 years 8,000 cycles/month
  - Optional power harvesting significantly extends service life
- Timeout Adjustment Settings: 30s

DOWNLOADS

- EAF 100/150 Installation Instructions
- EAF 100/150 (SP) Installation Instructions
- Optima Plus EAF 100 Repair and Maintenance Guide
- Faucet Spray Heads Repair and Maintenance Guide
- Additional Downloads



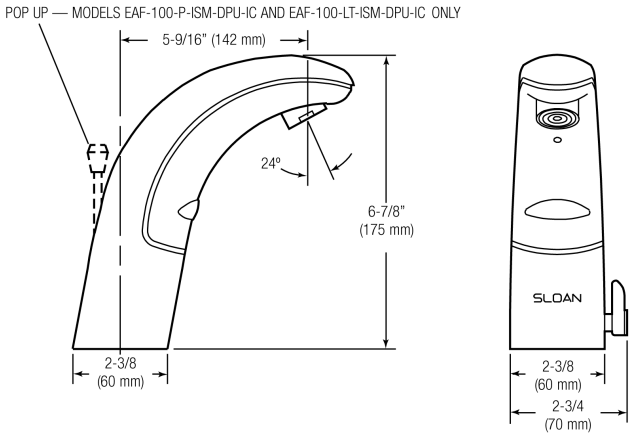

COMPLIANCES & CERTIFICATIONS

(ADA Compliant, ASME A112.18.1 Compliant, CEC Compliant, cUPC Certified, cUPC Low Lead Compliant, Proposition 65, TAS, UPC Certified, UPC Low Lead Compliant)

NOTES

All information contained within this document subject to change without notice.

Looking for other variations of the EAF-100 product? View the general spec sheet with all options.

Find a matching soap dispenser for this faucet.
Find a compatible sink for this faucet.

WARRANTY

3 Year

Sloan 10500 Seymour Ave, Franklin Park, IL 60131
Phone: 800.982.5839 • Fax: 800.447.8329 • sloan.com

ROUGH-IN

EAF-100, EAF-100-LT, EAF-100-P,
EAF-100-P-IC, AND EAF-100-LT-IC
Faucets with Single Line Water Supply

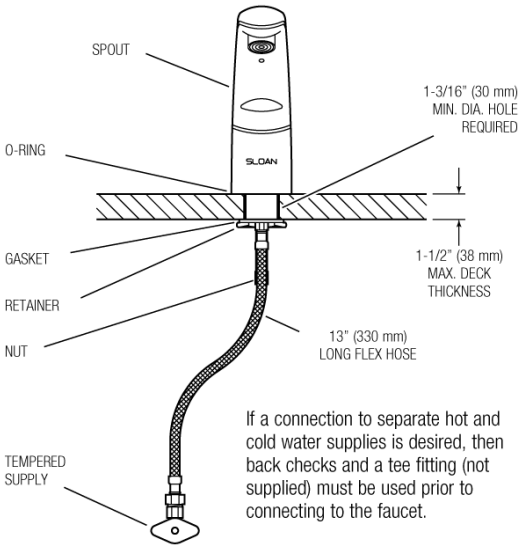

If a connection to separate hot and cold water supplies is desired, then back checks and a tee fitting (not supplied) must be used prior to connecting to the faucet.

EAF-100-ISM, EAF-100-ISM-IC AND
EAF-100-ISM-DPU-IC
Faucets with Hot and Cold Water Supply

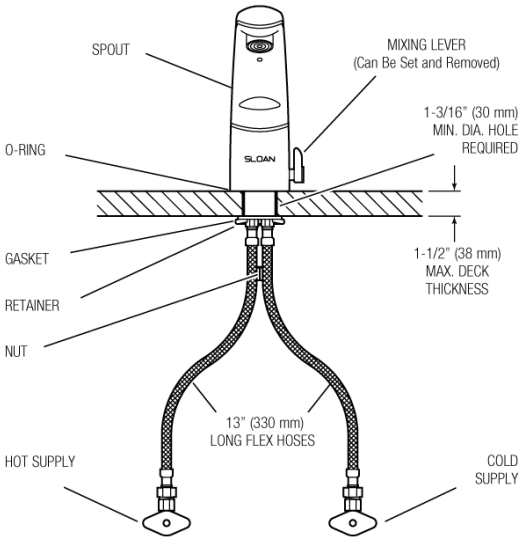

When the EAF faucet is installed on a sink that has three (3) hole punchings, a Trim Plate should be used. Trim Plates must be specified and ordered separately:

SFP-11
Trim Plate for 4" (102 mm) Centerset Sink

SFP-22
Trim Plate for 8" (204 mm) Centerset Sink