Faucet and Soap Dispenser Combination
ESD-601

▶ Code Number
3346090

▶ Description
The ESD-601 is part of Sloan's new line of matching combination soap dispensers and faucets. They are easy to order kits for any bathroom. The soap dispenser uses a replaceable soap refill bottle with easy release collar for fast soap refill changes. The sensor technology offers a hands-free operation by delivering a pre-measured foam soap application "on demand". The faucet is Sloan's EBF-615-4. The ESD-600 is also available for sale without faucet.

- Contains:
- 1-EBF-615-4 Chrome Faucet Battery Operated (3315114)
- 1-ESD-600 Soap Dispenser (3346091)
- 1-ESD-321 2 pack of 1500ml foam soap (3346044)

▶ Faucet
- ADA Compliant, Sensor Activated, 6 VDC, Chrome Plated Brass, Pedestal Hand Washing Faucet with the following features:
- Flow Rate: 0.5 gpm / 1.9 Lpm
- Splash-proof Circuit Control Module
- Adjustable Infrared Sensor Range
- 36" (914 mm) Long Sensor Cable
- 24" (610 mm) Long Flex Hose
- Filtered Solenoid Valve with serviceable Strainer Filter
- Non-aerated Spray Head

▶ Faucet Electrical Specifications
- Sensor Range Factory Set: 4" - 5" (102 mm - 127 mm) Adjustable: 2" - 7" (51 mm - 178 mm)
- Max. Distance Control Module may be installed from Spout With Standard Cable: 15" (381 mm)
- Battery Life 2 Years @ 8,000 Cycles / Month
- Includes four (4) AA-size Alkaline Batteries
- 6 VDC — operates on four (4) alkaline AA-size batteries. Optional 6 VDC Plug-in Adapter.

▶ Soap Dispenser Electrical Specifications
- Ships with battery pack (4 "D" Alkaline batteries included)
- Optional AC adaptor can be purchased separately (part number 0346090)
- Sensor range – nominal 5"
- GFI outlet suggested per code
- 120V/15 Amp



▶ Soap Dispenser
- Modular one-piece construction is easy to install on a sink deck surface
- All electronics in spout are sealed
- Designed for drip free foam dispensing operation
- Motor Assembly suspended under counter connected to soap dispenser spout
- Motor Assembly rotates 360 degrees for easy installation
- Battery life of 45,000 activations
- 1,500 dispenses per foam soap bottle
- Ships with 2 bottles of non-scented, non-colored foam soap (1500ml per bottle)
- Additional foam soap can be purchased through Sloan (ESD-321) or GOJO distribution (8565-02-N6300GN)

▶ Compliance & Certifications
ASME A112.18.1 and CSA B125.1

LOW-LEAD UPC C ®

CALGreen

This space for Architect/Engineer Approval

Faucet and Soap Dispenser Combination
ESD-601

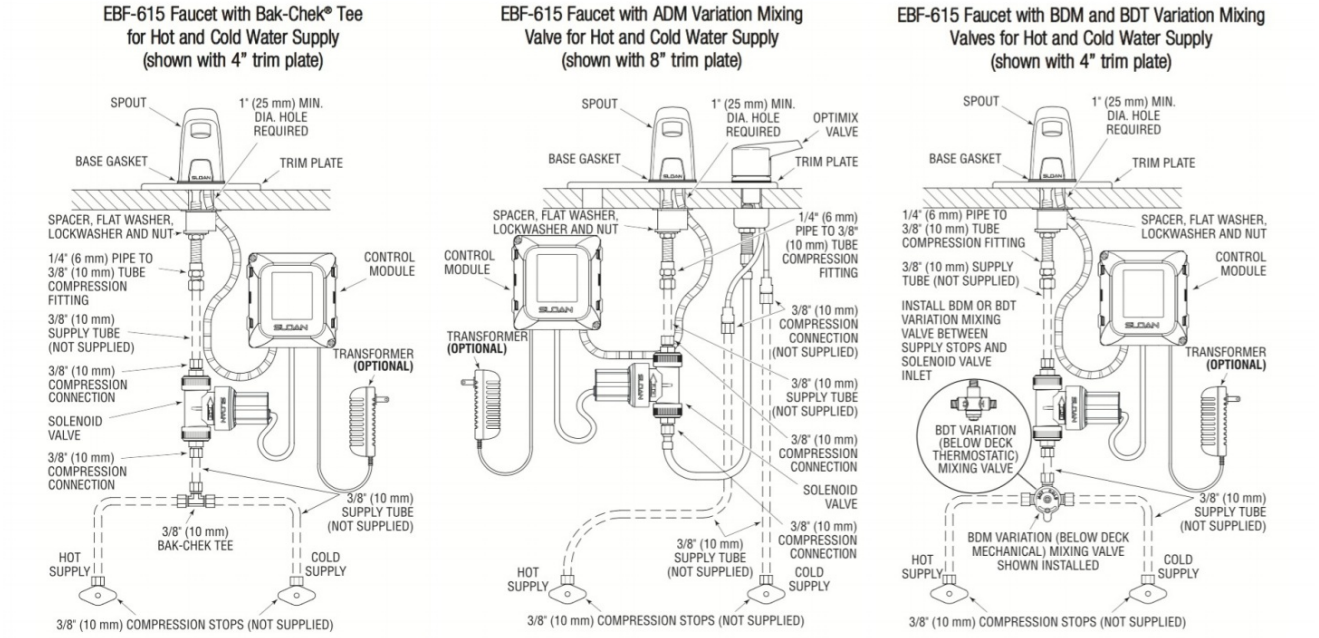

EBF-615-4 Faucet

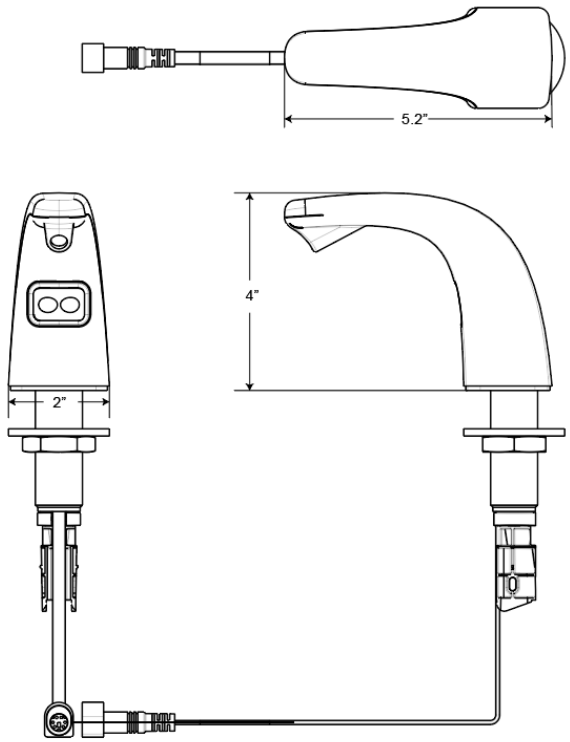

ESD-600 Soap Dispenser