Sloan Lino™ Faucet
EAF-250-ISM (IQ) 0.35 GPM

▶ Code Number
3335154

▶ Description
Battery Powered, Sensor Activated, Electronic Hand Washing Faucet for pre-tempered or hot and cold water operation.

▶ Flow Rates
0.35 gpm/1.3 Lpm Multi-Laminar

▶ Specifications
Sensor Activated, Electronic, Chrome Plated Die-Cast Metal, Hand Washing Faucet with the following features:

- Modular One-piece Construction with all Concealed Components above deck
- Double Infrared Sensors with Automatic Setting Feature and Microprocessor
- Low Battery Indicator
- Magnetic Solenoid Valve
- Water Supply Connection with Flexible High-pressure Hose and Strainer
- 6 volt Lithium CR-P2 Commercial Battery included
- Appropriate Mounting Hardware included

▶ Time Out Setting
30 seconds — Maximum time faucet will run upon continuous detection



EAF-250-ISM

▶ The new Optima® faucet — Bringing intelligence to water
Optional ISM models feature an integral temperature control lever which allows the user to adjust the water temperature. This adjustment can also be converted to a fixed setting. EAF faucets ordered without the ISM variation must be connected to a single, pre-tempered water supply.

The i.q.-Click feature allows the user to place the faucet into optional function modes, including "continuous run" and "temporary off" simply by pressing a button on the spout. The use of the i.q.-Click feature is recommended only in installations where users have a regular familiarity with the faucet (i.e., executive and non-public rest rooms). Models furnished with the i.q.-Click feature are also available with a Drain Pop Up.

Sloan's new Optima i.q. EAF-250 Series electronic hand washing faucets

Optima i.q. EAF-250 series faucets include a 6 VDC lithium battery. Battery life is approximately three (3) years.

▶ Compliance & Certifications
ASME A112.18.1-2011/CSA B125.1-11, NSF372, ICC/ANSI 117.1

CEC Compliant

LOW-LEAD UPC C ®

0.25 GPC

This space for Architect/Engineer Approval

SLOAN 10500 SEYMOUR AVE. ● FRANKLIN PARK, ● IL. 60131
Ph: 1-800-9-VALVE-9 or 1-847-671-4300 ● Fax: 1-800-447-8329 or 1-847-671-4380 ● http://www.sloan.com

Sloan Lino™ Faucet
EAF-250-ISM (IQ) 0.35 GPM

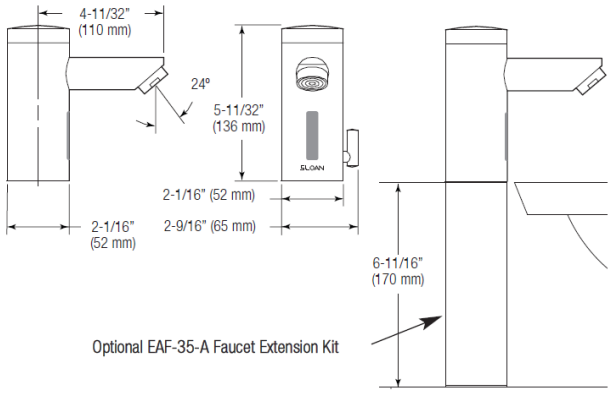

Optional EAF-35-A Faucet Extension Kit

▶ Control Circuit

6 VDC — Includes Auto Set Range Adjustment and Low Battery Indicator LED

▶ Sensor Range

Faucet Adaptive Self-adjustment Range: 2"-14" (51 mm -356 mm) nominal

Nominal: 4" - 5" (102 mm - 127 mm)

▶ Power Supply

6 VDC Lithium CR-P2 battery Approximate 3 year life

▶ OPERATION

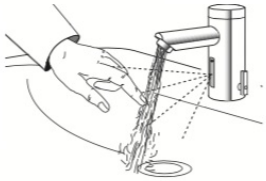

As the user's hands enter the beam's effective range, the beam is reflected back into the sensor receiver and activates the solenoid valve allowing water to flow from the faucet. Water will flow until the hands are removed or until the faucet reaches its automatic time out limit setting.

▶ i.q.-Click FEATURE

Because the use of the i.q.-Click feature requires familiarity with the faucet, this feature is not recommended for faucets intended for use by the general public. The i.q.-Click is ideal for use in hospital rooms, executive restrooms and other locations where the primary user has regular contact with the product.

▶ i.q.-Click SETTINGS

Function	Press Button	LED Signal
Continuous Run — 2 minute default setting (adjustable from 1 - 20 minutes)	1 time for 2 seconds	5 short flashes
reset:	1 time or will reset automatically after 2 minutes	
Temporary Off	2 times (double click)	5 short flashes followed by periodic flashing
reset:	1 time or will reset automatically after 2 minutes	
Auto Set Range Adjustment	2 times (double click) and then 1 time for 5 seconds	5 short flashes followed by 4 short flashes

▶ ROUGH-IN

EAF-250
Faucets with Single Line Water Supply

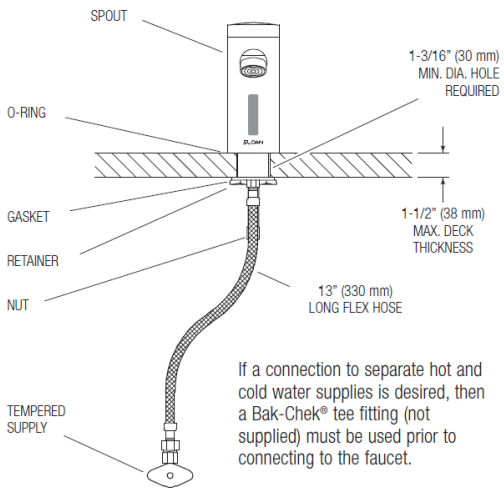

If a connection to separate hot and cold water supplies is desired, then a Bak-Chek® tee fitting (not supplied) must be used prior to connecting to the faucet.

EAF-250-ISM, EAF-250-ISM-IC AND
EAF-250-ISM-DPU-IC
Faucets with Hot and Cold Water Supply

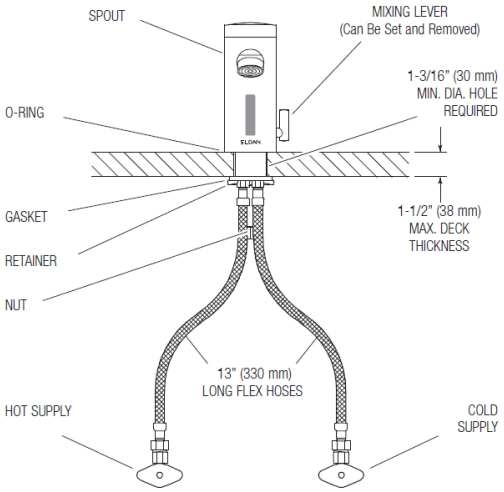

When the EAF faucet is installed on a sink that has three (3) hole punchings, a Trim Plate should be used. ***Trim Plates must be specified and ordered separately:***

ETF-312-A
Trim Plate for 4" (102 mm) Centerset Sink

ETF-510-A
Trim Plate for 8" (204 mm) Centerset Sink