LINO EAF-250



EAF-250 Series Faucet date code 1101 and newer. Product revised to make spray head vandal resistant without need for special spray. EAF-15 only works on product date code 1052 and older.

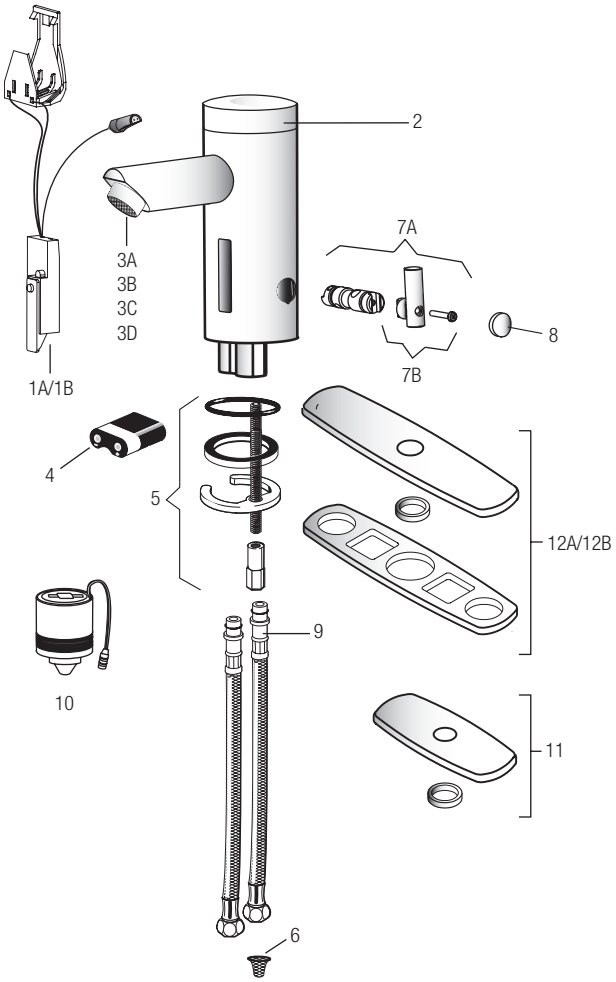

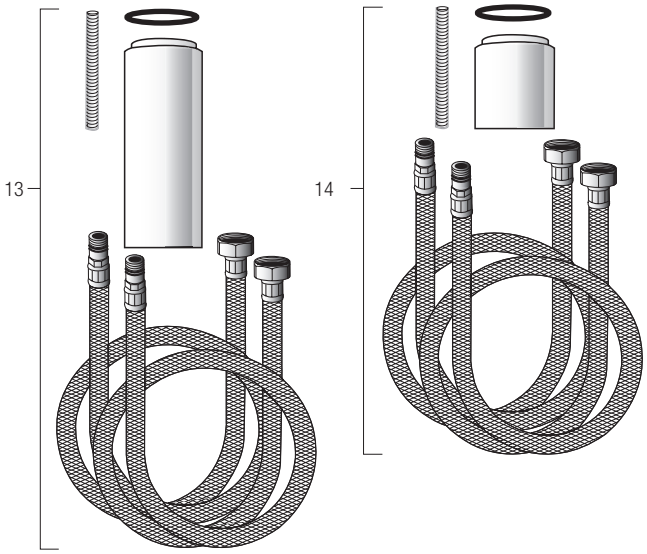

PARTS LIST—EAF-250 FAUCETS

Item No.	Code No.	Part No.	Description
1A.	**0335019**	EAF-21-A	Faucet Sensor Assembly without i.q.-cliq™
1B.	**0335018**	EAF-20-A	Faucet Sensor Assembly with i.q.-cliq™
2.	**0335027**	EAF-27	Cap
3A.	**0335012**	EAF-15	0.5 gpm (1.9 Lpm) VR Aerator Spray Head – Pre 03/2011
3B.	**0335008**	EAF-10	2.2 gpm (8.3 Lpm) Aerator Spray Head
3C.	**0335011**	EAF-13	2.2 gpm (8.3 Lpm) Laminar Flow Spray Head
3D.	**0335029**	EAF-51	0.35 gpm (1.3 Lpm) Multi-Laminar Spray Head
4.	**3335018**	EAF-1003	Battery Replacement Kit (CR-P2)
5.	**0335000**	EAF-1	Faucet Mounting Kit
6.	**0335007**	EAF-9	Strainer (Filter)
7A.	**0335019**	EAF-1004	Mixer Handle Assembly and Cartridge
7B.	**3335020**	EAF-1005	Handle Repair Kit
8.	**3335022**	EAF-1007	Handle Cap
9.	**3335023**	EAF-1008	13" (330 mm) Flexible Supply Hose
10.	**0335001**	EAF-2	Solenoid
11.	**3365468**	ETF-312-A	Trim Plate for 4" Centerset Sink
—	**0362011**	SFP-11-A	Use when needing 4" for EAF-35-A extension
12A.	**3365024**	ETF-510-A	Trim Plate for 8" Centerset Sink
12B.	**3362022**	SFP-22-A	Use when needing 8" for EAF-35-A extension
13.	**3335035**	EAF-35-A	Faucet Extension Kit
14 .	**3335046**	EAF-40-A	2-1/4" Faucet Extension Kit. Raises faucet such that outlet height complies with California Office of Statewide Health Planning and Deveplopment

— = Not shown in illustration

i.q.-cliq™ SETTINGS

Function	Press Button	LED Signal
Continuous Run – 2 minute default setting (adjustable from 1 – 20 minutes)	1 time for 2 seconds	5 short flashes
reset:	1 time or will reset automatically after 2 minutes	
Temporary Off	2 times (double click) periodic flashing	5 short flashes followed by
reset:	1 time or will reset automatically after 2 minutes	
Auto Set Range Adjustment	2 times (double click) and then 1 time for 5 seconds	5 short flashes followed by 4 short flashes

The information contained in this document is subject to change without notice.

LINO EAF-250

TROUBLESHOOTING GUIDE

1. Faucet DOES NOT function.

A. "Permanent Off" activated. Press button on faucet throat one time.

2. Faucet delivers water in an uncontrolled manner.

A. Faucet is not working properly. Contact Sloan Technical Support.

3. Faucet DOES NOT deliver any water when Sensor is activated.

INDICATOR: Solenoid valve produces an audible "CLICK."

A. Water supply stop(s) closed. Open water supply stop(s).

B. Water supply stop strainer(s) clogged. Remove, clean, and reinstall water supply stop strainer(s). Replace strainer(s) if required.

INDICATOR: Solenoid valve DOES NOT produce an audible "CLICK."

A. Battery low (battery powered models). Replace battery (refer to Battery Replacement on page 184).

4. Faucet delivers only a slow flow or dribble when sensor is activated.

A. Water supply stop(s) are partially closed. Completely open water supply stop(s).

B. Water supply stop strainer(s) clogged. Remove, clean, and reinstall water supply stop strainer(s). Replace strainer(s) if required.

C. Aerator is clogged. Remove, clean, and reinstall Aerator. Replace Aerator if required.

D. Faucet is not working properly. Contact Sloan Technical Support.

5. Faucet DOES NOT stop delivering water or continues to drip after user is no longer detected.

A. Faucet is not working properly. Contact Sloan Technical Support.

6. LED indicator blinks when faucet is in use.

A. Battery low (battery powered models). Replace battery (refer to Battery Replacement on page 184).

7. The water temperature is too hot or too cold on a faucet connected to hot and cold supply lines.

A. Supply stops are not adjusted properly. Adjust supply stops.

B. For models with integral mixing valve – Mixing valve is set improperly for the water temperature desired. Rotate mixing valve handle clockwise to decrease water temperature or counterclockwise to increase water temperature.

OPERATION

As the user's hands enter the beam's effective range, the beam is reflected back into the sensor receiver and activates the solenoid valve allowing water to flow from the faucet. Water will flow until the hands are removed or until the faucet reaches its automatic time out limit setting.

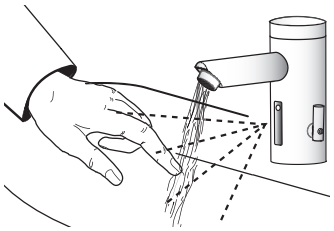

CARE AND CLEANING

DO NOT use abrasive or chemical cleaners (including chlorine bleach) to clean faucet that may dull the luster and attack the chrome or special decorative finishes. Use **ONLY** mild soap and water, then wipe dry with clean cloth or towel.

While cleaning the bathroom tile, protect the faucet from any splattering of cleaner. Acids and cleaning fluids will discolor or remove chrome plating.

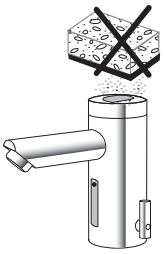

When assistance is required, please contact Sloan Technical Support at: 1-888-SLOAN-14 (1-888-756-2614).

The information contained in this document is subject to change without notice.