Optima i.q.® Gooseneck Faucet
EAF-750-ISM 0.35 GPM

▶ Code Number
3335162

▶ Description
Battery Powered, Sensor Activated, Electronic Gooseneck Hand Washing Faucet for hot and cold water operation.

▶ Flow Rates
0.35 gpm/1.3 Lpm Multi-Laminar

▶ Specifications
Sensor Activated, Electronic, Chrome Plated Die-Cast Metal, Gooseneck Hand Washing Faucet with the following features:

- Temporary-off Feature for Cleaning
- 12/24 hour Hygienic Rinse Line Purge Function – Field Settable
- Unitary Spout Housing Assembly for Easy Cleaning
- Modular One-piece Construction with all Concealed Components above deck
- Double Infrared Sensors with Automatic Setting Feature and Microprocessor
- Low Battery Indicator
- ISM mechanical mixing, integral to spout
- Bi-stable Magnetic Solenoid Valve
- Water Supply Connection with Flexible High-pressure Hose and Strainer
- Appropriate Mounting Hardware included
- Installation Similar to Conventional Single Lever Faucet
- 6 volt Lithium CR-P2 Commercial Battery included

▶ Accessories (Sold Separately)
Trim Plates must be specified and ordered separately.

▶ Control Circuit
6.75 VDC — Includes Auto Set Range Adjustment and Low Battery Indicator LED

▶ Sensor Range
Faucet Adaptive Self-adjustment Range: 2"-14" (51 mm -356 mm) nominal

Nominal: 4" - 5" (102 mm - 127 mm)

▶ Power Supply
6 VDC Lithium CR P2 battery Up to Ten (10) Year Battery Life

▶ Time Out Setting
30 seconds — Maximum time faucet will run upon continuous detection



EAF-750-ISM Shown

▶ The new Optima® faucet — Bringing intelligence to water
Sloan's new Optima i.q. EAF-750 Series electronic hand washing faucets operate by means of a dual infrared sensor and microprocessor based logic. The modular design incorporates all of the operating components of the faucet, including the sensor, solenoid, circuitry and battery above the sink within a die-cast metal spout.

Optima i.q. EAF-750 series faucets include a 6 VDC lithium battery. Battery life is approximately three (3) years.

Battery shelf life is ten years. Battery service life varies with usage.

Optional ISM models feature an integral temperature control lever which allows the user to adjust the water temperature. This adjustment can also be converted to a fixed setting. EAF faucets ordered without the ISM variation must be connected to a single, pre-tempered water supply.

The i.q.-Click feature allows the user to place the faucet into optional function modes, including "continuous run" and "temporary off" simply by pressing a button on the spout. The use of the i.q.-Click feature is recommended only in installations where users have a regular familiarity with the faucet (i.e., executive and non-public rest rooms). Models furnished with the i.q.-Click feature are also available with a Drain Pop Up.

▶ Compliance & Certifications
ASME A112.18.1-2011/CSA B125.1-11, NSF372, ICC/ANSI 117.1

CEC Compliant

LOW-LEAD UPC C ®

0.25 GPC

CALGreen

This space for Architect/Engineer Approval

▶ OPERATION

As the user's hands enter the beam's effective range, the beam is reflected back into the sensor receiver and activates the solenoid valve allowing water to flow from the faucet. Water will flow until the hands are removed or until the faucet reaches its automatic time out limit setting.

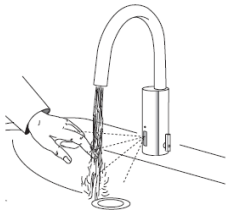

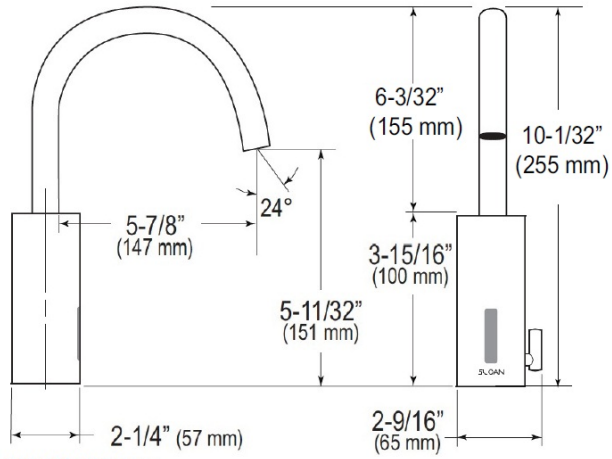

EAF-750-ISM Shown

▶ ROUGH-IN

EAF-750
Faucets with Single Line Water Supply

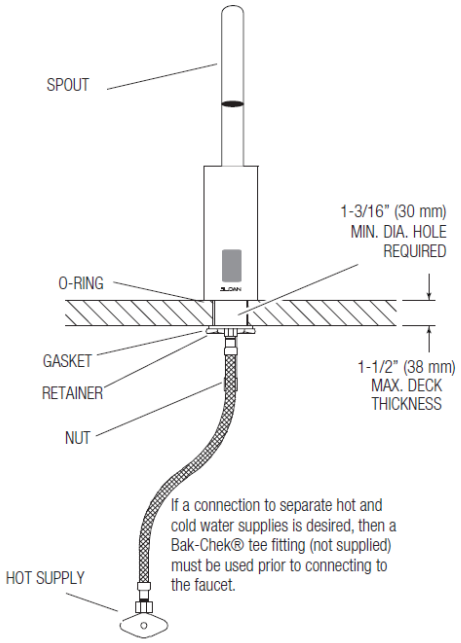

EAF-750-ISM
Faucets with Hot and Cold Water Supply

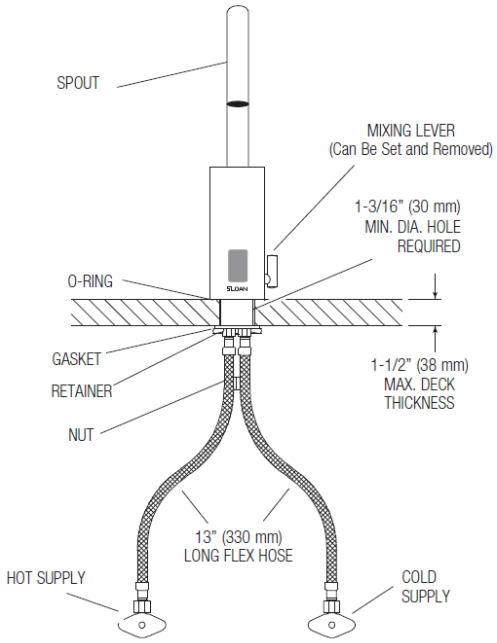

When the EAF faucet is installed on a sink that has three (3) hole punchings, a Trim Plate should be used. **Trim Plates must be specified and ordered separately:**

SFP-11
Trim Plate for 4" (102 mm) Centerset Sink

SFP-22
Trim Plate for 8" (204 mm) Centerset Sink