# EBF-615-8-BAT-BDT-CP-0.5GPM-MLM-IR-BT-FCT

## CODE NUMBER

3315182BT

## DESCRIPTION

8" Trim Plate, Battery Power Supply, Below Deck Thermostatic Mixing Valve, Polished Chrome Finish, 0.5 gpm, Multi-Laminar Spray, Infrared Sensor, Smart Faucet, Optima® Battery-Powered Deck-Mounted Low Body Faucet.

## DETAILS

- Flow Rate: 0.5 gpm (2 Lpm) (0.5GPM)
- Spray Type: Multi-Laminar (MLM)
- Sensor Type: Infrared (IR)
- Mounting Type: Single Hole
- Trim Plate: 8" (203mm) (8)
- Power Supply: Battery (BAT)
- Temperature Mixer: Below Deck Thermostatic Mixing Valve (BDT)
- Finish: Polished Chrome (CP)
- Factory Default Timeout: 30s
- Factory Default GPC: 0.25

## FEATURES

Commercial Grade Faucet, ADA Compliant, Cast Brass Spout, Quick Connect Fittings, Integrated Water Shut-off, Wireless Settings Adjustment, On-demand or Metered activation, Hygienic Line Flush, Water Usage and Battery Strength Reporting, Self-adapting Sensor

## ELECTRICAL SPECIFICATIONS

- Battery Life: 3 years 8,000 cycles/month
  - Optional power harvesting significantly extends service life
- Self-Adjustment Range: 1"–14" (25–356mm)
- Sensor Range: 4"–5" (102–127mm)
- Timeout Adjustment Settings: 30s

## POWER SUPPLY OPTIONS

- 6VDC Plug Adapter (sold separately)*
- 6VDC Ganged Adapter Kit (up to 6 units)(sold separately)*
- 24VAC Box Transformer (up to 3 units)(sold separately)*
- Optional Turbine Energy Harvesting

* when converting units to hardwired with battery back-up

## VIDEOS

- Optima Faucet App
- Sloan Optima Below Deck Faucet

## DOWNLOADS

- Optima Smart Faucet Below Deck Installation Instructions
- Faucet Spray Heads Repair and Maintenance Guide
- ETF-610/EBF-615 Below Deck Repair and Maintenance Guide
- Additional Downloads



Variation not shown: 8" Trim Plate

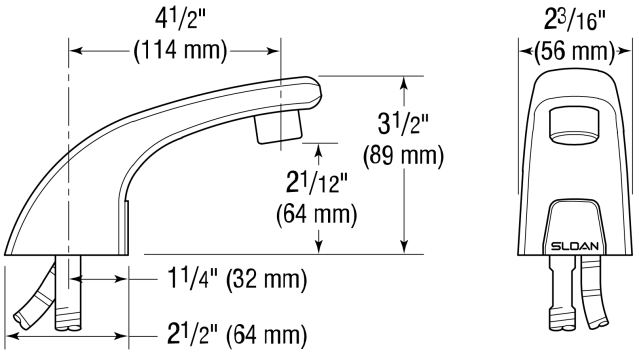


## COMPLIANCES & CERTIFICATIONS

(ADA Compliant, ASME A112.18.1 Compliant, CalGreen Compliant, CEC Compliant, cUPC Certified, cUPC Low Lead Compliant, GPC 0.25 or less, NYC604.4, Proposition 65, TAS, UPC Certified, UPC Low Lead Compliant)

## RECOMMENDED SPECIFICATION

Faucet shall include cast brass body, quick-connect fittings, twist-off/shut-off solenoid assembly, removable battery cartridge, flexible power supply and allow adjustment of settings wirelessly via Apple or Android smartphones.

## NOTES

All information contained within this document subject to change without notice.

Looking for other variations of the EBF-615 product? View the general spec sheet with all options.

Find a matching soap dispenser for this faucet.
Find a compatible sink for this faucet.

**Sloan 10500 Seymour Ave, Franklin Park, IL 60131**
Phone: 800.982.5839 • Fax: 800.447.8329 • sloan.com

## WARRANTY

3 Year

## ROUGH-IN

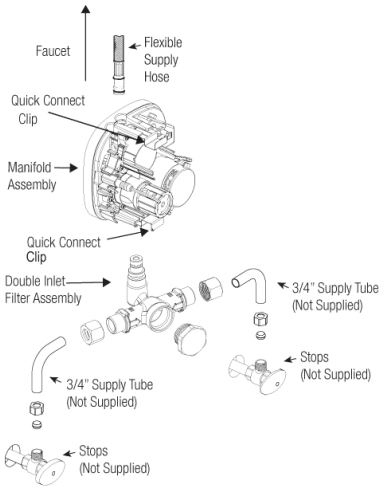


**Double Inlet Filter Fitting**

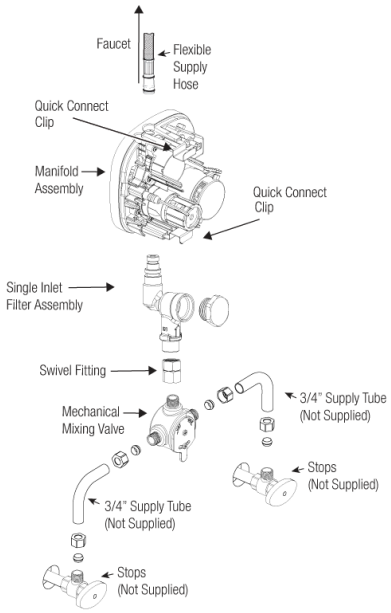


**Single Inlet Filter Fitting Kit with Below Deck Manual Mixing Valve (BDM)**

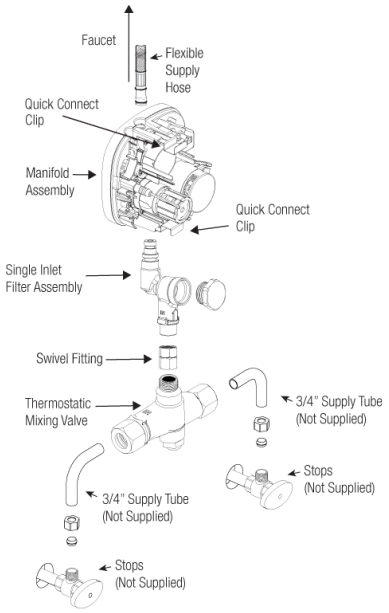


**Single Inlet Filter Fitting Kit with Below Deck Thermostatic Mixing Valve (BDT)**

**Sloan 10500 Seymour Ave, Franklin Park, IL 60131**
Phone: 800.982.5839 • Fax: 800.447.8329 • sloan.com