Optima i.q.® Gooseneck Faucet
EAF-750-ISM

▶ Code Number
3335074

▶ Description
Battery Powered, Sensor Activated, Electronic Gooseneck Hand Washing Faucet for hot and cold water operation.

▶ Flow Rates
1.5 gpm/5.7 Lpm Laminar Flow Spray Insert

▶ Specifications
Sensor Activated, Electronic, Chrome Plated Die-Cast Metal, Gooseneck Hand Washing Faucet with the following features:

- Temporary-off Feature for Cleaning
- 12/24 hour Hygienic Rinse Line Purge Function – Field Settable
- Unitary Spout Housing Assembly for Easy Cleaning
- Modular One-piece Construction with all Concealed Components above deck
- Double Infrared Sensors with Automatic Setting Feature and Microprocessor
- Low Battery Indicator
- Bi-stable Magnetic Solenoid Valve
- Water Supply Connection with Flexible High-pressure Hose and Strainer
- 6 volt Lithium CR P2 Commercial Battery included
- Appropriate Mounting Hardware included
- Installation Similar to Conventional Single Lever Faucet

▶ Accessories (Sold Separately)
Trim Plates must be specified and ordered separately.

▶ Control Circuit
6.75 VDC — Includes Auto Set Range Adjustment and Low Battery Indicator LED

▶ Sensor Range
Nominal: 4"-5" (102 mm - 127 mm)

Faucet Adaptive Self-adjustment Range: 2"-14" (51 mm -356 mm) nominal

▶ Power Supply
6 VDC Lithium CR P2 battery Up to Ten (10) Year Battery Life

▶ Time Out Setting
2 minutes— Maximum time faucet will run upon continuous detection (except for i.q.-Click models that are otherwise set in continuous run).



EAF-750-ISM Shown

▶ The new Optima i.q. faucet — Bringing intelligence to water
Sloan's new Optima i.q. EAF-750 Series electronic hand washing faucets operate by means of a dual infrared sensor and microprocessor based logic. The modular design incorporates all of the operating components of the faucet, including the sensor, solenoid, circuitry and battery above the sink within a die-cast metal spout.

ISM models feature an integral temperature control lever which allows the user to adjust the water temperature. This adjustment can also be converted to a fixed setting.

The i.q.-Click feature allows the user to place the faucet into optional function modes, including "continuous run" and "temporary off" simply by pressing a button on the spout. The use of the i.q.-Click feature is recommended only in installations where users have a regular familiarity with the faucet.

Optima i.q. EAF-750 series faucets include a 6 VDC lithium battery. Battery life is approximately three (3) years.

Battery shelf life is ten years. Battery service life varies with usage.

▶ Compliance & Certifications
ASME A112.18.1-2005/CSA B125.1-05, ISO/IEC 17025

This space for Architect/Engineer Approval

▶ OPERATION

As the user's hands enter the beam's effective range, the beam is reflected back into the sensor receiver and activates the solenoid valve allowing water to flow from the faucet. Water will flow until the hands are removed or until the faucet reaches its automatic time out limit setting.

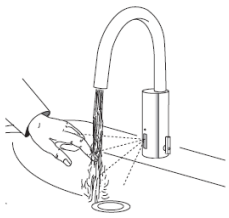

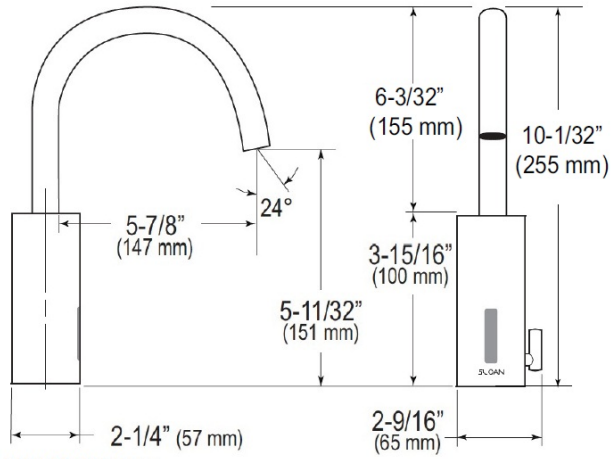

EAF-750-ISM Shown

▶ ROUGH-IN

EAF-750
Faucets with Single Line Water Supply

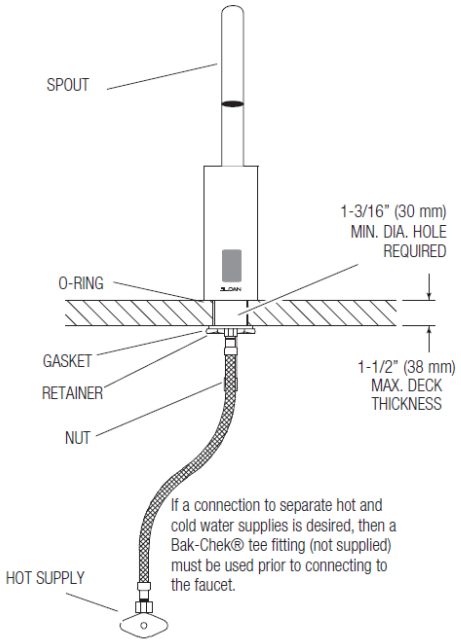

EAF-750-ISM
Faucets with Hot and Cold Water Supply

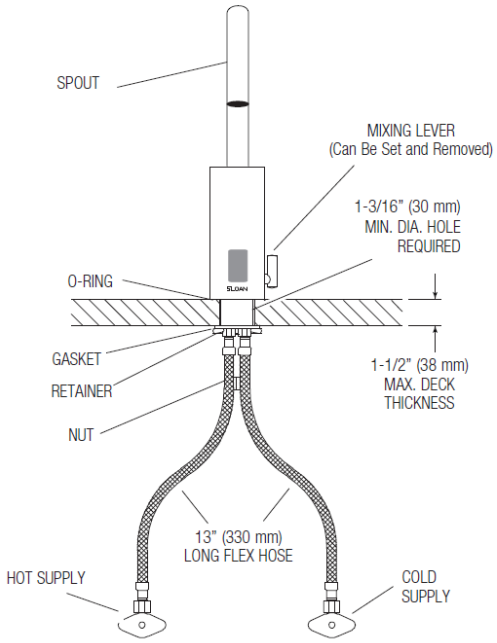

When the EAF faucet is installed on a sink that has three (3) hole punchings, a Trim Plate should be used. **Trim Plates must be specified and ordered separately:**

SFP-11
Trim Plate for 4" (102 mm) Centerset Sink

SFP-22
Trim Plate for 8" (204 mm) Centerset Sink