BASYS® Low Pedestal Faucet
EFX 380.000.0000

▶ Code Number
3324012

▶ Description
Turbine powered, sensor activated, electronic, chrome plated die cast body, pedestal hand washing faucet for pre-tempered or hot and cold water operation.

▶ Flow Rates
0.5 gpm (1.9 Lpm) Lpm Multi-Laminar

▶ Specifications
- ☐ One tool service
- ☐ Solenoid housed in removable carrier that includes supply strainer
- ☐ Integral water supply shut off
- ☐ Vandal resistant spray insert, key housed inside faucet body
- ☐ All electronics sealed to IP-67
- ☐ Gold plated electrical contacts
- ☐ Above deck individual diagnostic indicators for battery life, solenoid condition, and power up mode
- ☐ Four (4) "AA" alkaline batteries
- ☐ Includes all mounting hardware
- ☐ Modular construction
- ☐ Single hole installation (pedestal)
- ☐ Thermostatic, below deck for ASSE 1070 compliance
- ☐ Flexible, high pressure supply hose(s), 3/8" compression connections
- ☐ Turbine Powered, Sensor Activated, Electronic, Chrome Plated Die Cast Body, Hand Washing Faucet with the following features:
- ☐ Capacitance sensing elimates potential vandal point
- ☐ Bi-stable Magnetic Solenoid Valve

▶ Control Circuit
6.75 VDC

▶ Battery Life
5-years under worst case conditions of 8,000 cycles per month and high water pressure. Optional power harvesting may extend service life of batteries to equal the shelf life.

▶ DIMENSIONS

▶ Solenoid Valve
Filtered Solenoid Valve with Serviceable Strainer Filter

▶ Automatic Time Out Adjustment Settings
10 seconds — The Faucet Time out Setting determines the maximum time the faucet will run upon continuous detection. The EFX Faucet is Factory set at 10 second time out at 1.5 gpm and 30 second time out at 0.5 gpm. Consult factory for time out settings to meet individual application requirements.

▶ Max. Distance Control Module may be installed from Spout
With Standard Cable: 30" (762 mm)



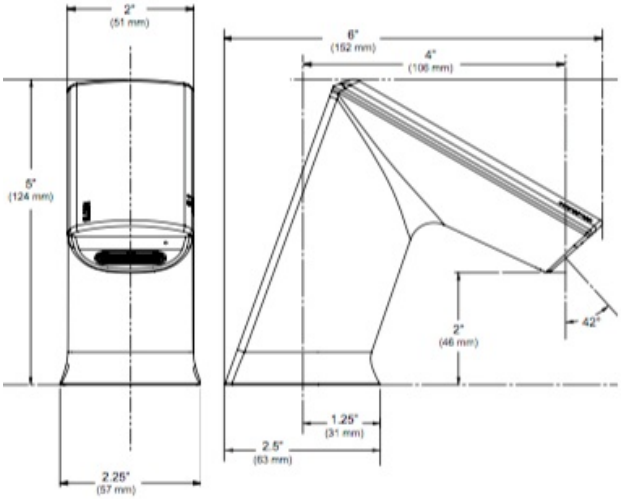

▶ BASYS Spec Language
Sloan BASYS Model No. EFX-380.01__._____ Capacitance Sensor Activated Electronic Handwashing Faucet for pre-tempered or hot/cold water supplies. Product to have double infrared sensors with automatic setting feature. Solenoid valve housed in removable carrier that closes water supply upon removal, eliminating need to access control stops. Solenoid carrier included for easy above deck service. Thermostatic mixer ordered separately to comply with ASSE 1070 requirements. The product shall be tested and certified to industry standards: ASME A112.18.1M, CSA B125.1, California Health and Safety Code 116875 (AB1953-2006), and Vermont Bill S.152. This product meets ADA ANSI/ICC A117.1 requirements. Low Lead Compliant. Buy American Act Compliant.

▶ Model Creation Guide

Model Creation Guide
EFX-3 8 0 . 0 1 X . 0 X 0 0 . X

	Body Type	Power	Crown	.	Mix	Sensing	Flow Rate	.	Battery Type	Base Plate	Adapters	Drain Pop-Up	.	Finish
0	–	–	Std Bowed		None	–	☐ 0.5 gpm Multi-Lam		Alkaline	☐ None	None	No		☐ CP
1	–	–	–		–	Capacitance	–		–	☐ 4"	–	–		☐ PVDSF
2	–	–	–		–	–	☐ 1.5 gpm Aerated + Laminar		–	☐ 8"	–	–		–
3	–	–	–		–	–	–		–	–	–	–		–
4	–	–	–		–	–	–		–	–	–	–		–
5	–	–	–		–	–	–		–	–	–	–		–
6	Pedestal	–	–		–	–	–		–	–	–	–		–
7	–	–	–		–	–	–		–	–	–	–		–
8	–	Turbine	–		–	–	–		–	–	–	–		–

This space for Architect/Engineer Approval

▶ OPERATION



1. A continuous electric field is emitted and monitored by the faucet system.



2. As the user's hands enter the effective range the sensor activates the solenoid valve allowing tempered water to flow from the faucet. Water will flow until the hands are removed or until the faucet reached its automatic time out setting.

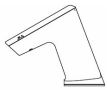

3. When hands are moved away from the EFX faucet, the capacitive sensor deactivates the solenoid valve, shutting off the water flow. The system automatically resets and is ready for the next user.

▶ Sensor Range

Faucet Adaptive Self-adjustment Range: 2"-14" (51 mm -356 mm) nominal

Nominal: 4" - 5" (102 mm - 127 mm)

▶ ROUGH-IN

Base Plates should be specified at time of order.

EFX Faucet with Below Deck Thermostatic for Hot and Cold Water Supply

EFX Faucet with Below Deck Thermostatic for Hot and Cold Water Supply (shown with 4" Trim Plate)

When the EFX Series faucet is installed on a sink that has three (3) hole punchings, a Base Plate should be used.

EFX-20-A – 4" Centerset

EFX-26-A – 8" Centerset

