Sloan Lino™ Faucet
EAF 200-P ISM 0.35 GPM

▶ Code Number
3335156

▶ Description
6 VDC Adapter Powered, Sensor Activated, Electronic Hand Washing Faucet for pre-tempered or hot and cold water operation.

▶ Flow Rates
0.35 gpm/1.3 Lpm Multi-Laminar

▶ Specifications
- Sensor Activated, Electronic, Chrome Plated Die-Cast Metal, Hand Washing Faucet with the following features:
- Modular One-piece Construction with all Concealed Components above deck
- Double Infrared Sensors with Automatic Setting Feature and Microprocessor
- Magnetic Solenoid Valve
- Water Supply Connection with Flexible High-pressure Hose and Strainer
- 6 Volt DC Plug-in Adapter (must be ordered separately for Less Adapter/Transformer (-LT) faucets)
- Appropriate Mounting Hardware included

▶ Variations
- P - Plug-In Adapter
- ISM - Integral Side Mixer

▶ Accessories (Sold Separately)
- Trim Plates must be specified and ordered separately.
- See accessories section of the Sloan catalog for details on these and other shower head variations.

▶ Sensor Range
Faucet Adaptive Self-adjustment Range: 2"-14" (51 mm -356 mm) nominal

Nominal: 4" - 5" (102 mm - 127 mm)

▶ Time Out Setting
30 seconds — Maximum time faucet will run upon continuous detection



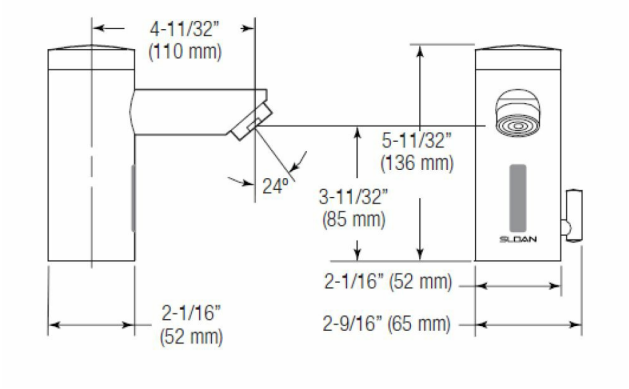

▶ The new Optima® faucet — Bringing intelligence to water
Sloan's new Optima i.q. EAF-200 Series electronic hand washing faucets operate by means of a dual infrared sensor and microprocessor based logic. The modular design incorporates all of the operating components of the faucet, including the sensor, solenoid and circuitry above the sink within a die-cast metal spout.

Optional ISM models feature an integral temperature control lever which allows the user to adjust the water temperature. This adjustment can also be converted to a fixed setting. EAF faucets ordered without the ISM variation must be connected to a single, pre-tempered water supply.

▶ Compliance & Certifications
ASME A112.18.1-2011/CSA B125.1-11, NSF372, ICC/ANSI 117.1

CEC Compliant

LOW-LEAD UPC C ®

0.25 GPC

CALGreen

This space for Architect/Engineer Approval

SLOAN 10500 SEYMOUR AVE. ● FRANKLIN PARK, ● IL. 60131
Ph: 1-800-9-VALVE-9 or 1-847-671-4300 ● Fax: 1-800-447-8329 or 1-847-671-4380 ● http://www.sloan.com

► OPERATION

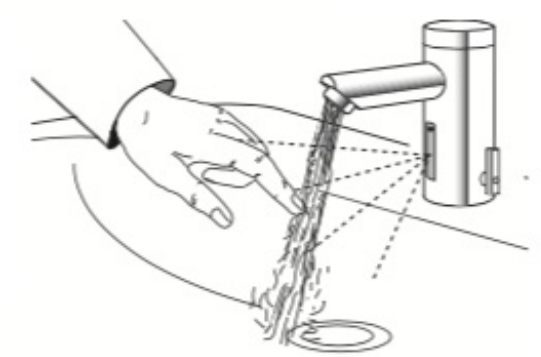

As the user's hands enter the beam's effective range, the beam is reflected back into the sensor receiver and activates the solenoid valve allowing water to flow from the faucet. Water will flow until the hands are removed or until the faucet reaches its automatic time out limit setting.

► ROUGH-IN

EAF-200
Faucets with Single Line Water Supply

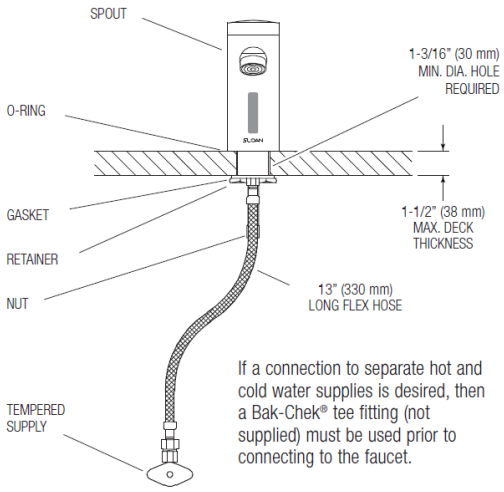

If a connection to separate hot and cold water supplies is desired, then a Bak-Chek® tee fitting (not supplied) must be used prior to connecting to the faucet.

EAF-200-ISM, EAF-200-ISM-IC AND
EAF-200-ISM-DPU-IC
Faucets with Hot and Cold Water Supply

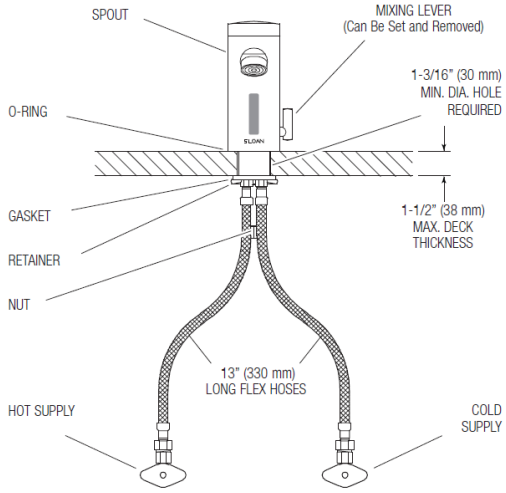

When the EAF faucet is installed on a sink that has three (3) hole punchings, a Trim Plate should be used. ***Trim Plates must be specified and ordered separately:***

ETF-312-A
Trim Plate for 4" (102 mm) Centerset Sink

ETF-510-A
Trim Plate for 8" (204 mm) Centerset Sink