Optima® Faucet
EAF-100-P-0.35 GPM

▶ Code Number
3335161

▶ Flow Rates
0.35 gpm/1.3 Lpm Multi-Laminar

▶ Specifications
Sensor Activated, Electronic, Chrome Plated Die-Cast Metal, Hand Washing Faucet with the following features:

- Modular One-piece Construction with all Concealed Components above deck
- Appropriate Mounting Hardware included
- Automatic Self-adapting Sensor Technology
- Magnetic Solenoid Valve
- Water Supply Connection with Flexible High-pressure Hose and Strainer
- Double Infrared Sensors with Automatic Setup and Indicator Light
- Optional 24 Hour Sentinel Activation

▶ Variations
☐ P - Plug-In Adapter

▶ Accessories (Sold Separately)
☐ See accessories section of the Sloan catalog for details on these and other shower head variations.

▶ Control Circuit
6 VDC — Includes Auto Set Range Adjustment and Low Battery Indicator LED

▶ Sensor Range
Nominal: 4" - 5" (102 mm - 127 mm)

Faucet Adaptive Self-adjustment Range: 2"-14" (51 mm -356 mm) nominal

▶ Power Supply
120 VAC/6 VDC Plug-in Adapter

▶ Time Out Setting
30 seconds — Maximum time faucet will run upon continuous detection



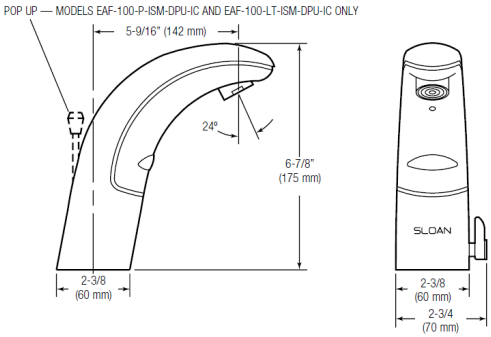

▶ The new Optima® faucet — Bringing intelligence to water
Sloan's Optima i.q. EAF-100 Series electronic hand washing faucets activates by means of a dual infrared sensor and microprocessor based logic that utilize self-adapting technology to ensure superior performance. The modular design incorporates all of the operating components of the faucet, including the sensor, solenoid and circuitry above the sink within a die-cast metal spout.

Optional ISM models feature an integral temperature control lever which allows the user to adjust the water temperature. This adjustment can also be converted to a fixed setting. EAF faucets ordered without the ISM variation must be connected to a single, pre-tempered water supply.

Optima i.q. EAF-100 series faucets are powered by a 6 VDC plug-in adapter. Each plug-in adapter can supply power for up to six (6) faucets by means of the Daisy Chain Electrical Splitter (optional) with each (-LT) faucet.

▶ Compliance & Certifications
ASME A112.18.1-2011/CSA B125.1-11, NSF372, ICC/ANSI 117.1

0.25 GPC

LOW-LEAD UPC C ®

This space for Architect/Engineer Approval

► ELECTRICAL CONNECTION FOR UP TO SIX (6) FAUCETS USING ONE (1) ADAPTER

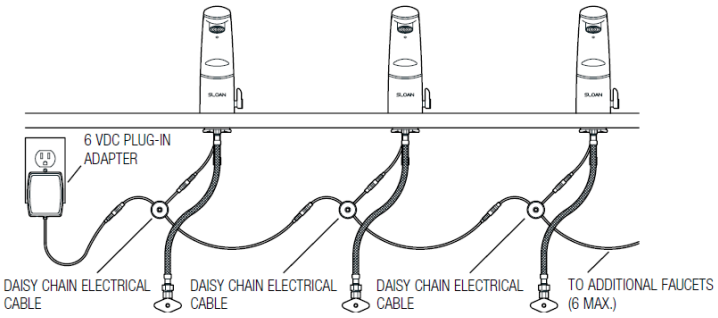

EAF-100, EAF-100-LT, EAF-100-P, EAF-100-P-IC, AND EAF-100-LT-IC Faucets with Single Line Water Supply

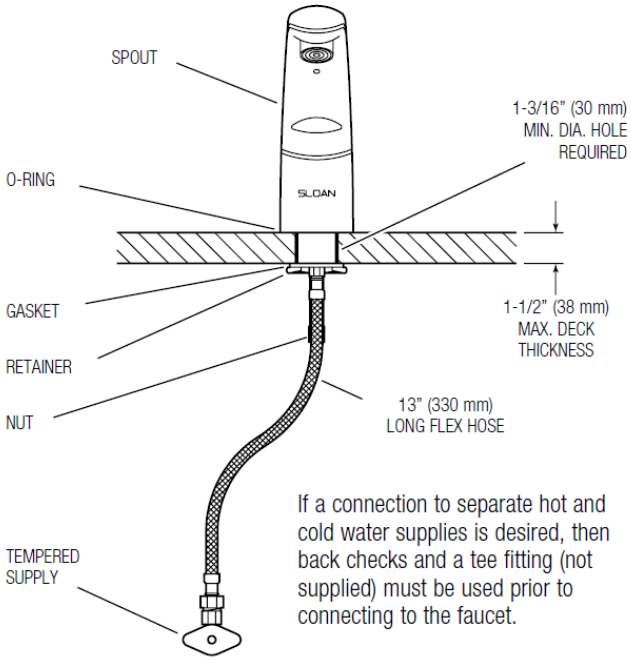

If a connection to separate hot and cold water supplies is desired, then back checks and a tee fitting (not supplied) must be used prior to connecting to the faucet.

EAF-100-ISM, EAF-100-ISM-IC AND EAF-100-ISM-DPU-IC Faucets with Hot and Cold Water Supply

