CODE NUMBER

3346155

DESCRIPTION

Graphite Finish, Sloan® Deck-Mounted Foam Soap Dispenser.

DETAILS

- Finish: Graphite (GR)
- Power Type: Battery
- Height: 4" (102mm)
- Width: 2" (51mm)
- Depth: 5 ⅕" (132mm)
- Sensor Type: IR

FEATURES

Sensor Activated, Electronic, PVD Graphite Die Cast Body, Hand Washing Foam Soap Dispenser with the following features:



COMPLIANCES & CERTIFICATIONS

(ADA Compliant)

RECOMMENDED SPECIFICATION

Sloan Foam Soap Dispenser model number ESD-600. Graphite Dispenser. Supplied with 2 bottles of 1500ml soap.

DOWNLOADS

- ESD Series Installation Instructions
- ESD-500/600/700/800/1500/2000/2100 Repair and Maintenance Guide
- Additional Downloads

NOTES

All information contained within this document subject to change without notice.

Sloan 10500 Seymour Ave, Franklin Park, IL 60131
Phone: 800.982.5839 • Fax: 800.447.8329 • sloan.com

- Modular one-piece construction easily attaches to deck surface
- All electronics in spout are sealed
- Designed for drip free foam dispensing operation
- Motor Assembly suspended under counter connected to soap dispenser spout
- Motor Assembly rotates 360 degrees for easy installation
- Battery life of 45,000 activations
- 1,500 dispenses per foam soap bottle
- Ships with 2 bottles of non-scented, non-colored foam soap (1500ml per bottle)
- Additional foam soap can be purchased through Sloan (ESD-321) or GOJO distribution (8565-02-N6300GN)
- Ships with battery pack (4 "D" Alkaline batteries included)
- Sensor range – nominal 5”
- GFI outlet suggested per code
- 120V/15 Amp
- Optional AC adaptor can be purchased separately (part number 0346090)

SOAP REFILLS

- ESD-321 (1500mL)

VIDEOS

PVD Special Finishes

Sloan 10500 Seymour Ave, Franklin Park, IL 60131
Phone: 800.982.5839 • Fax: 800.447.8329 • sloan.com

ROUGH-IN

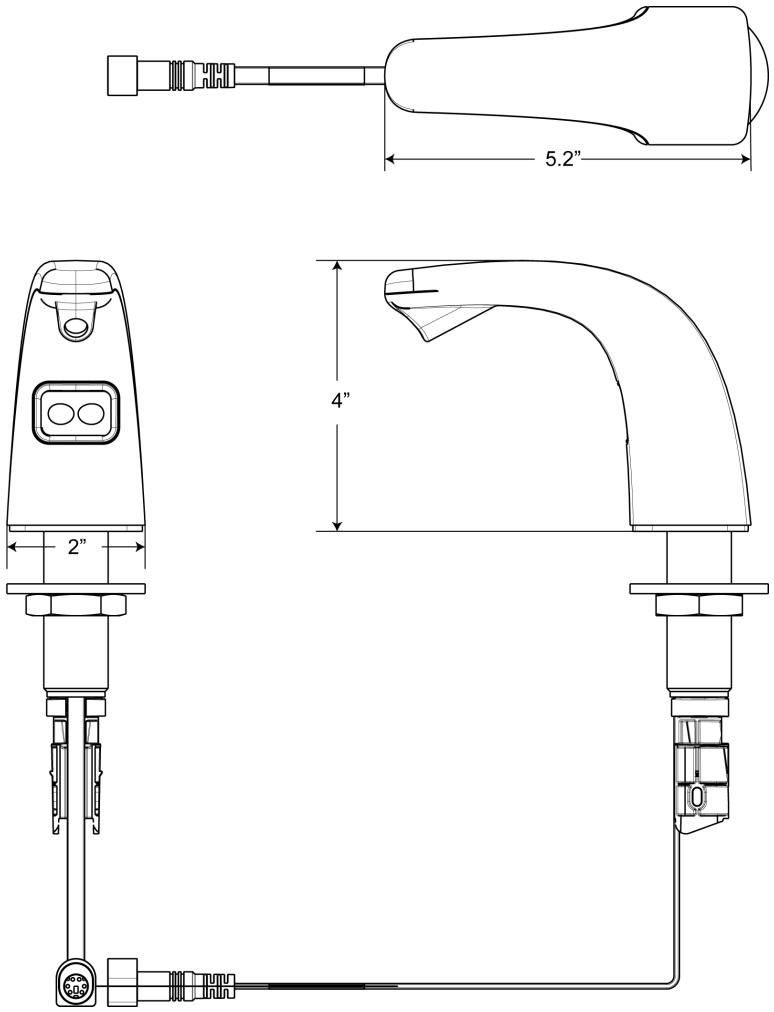

MATCHING FAUCETS

	Name	Description	
	ETF-610	Optima® Hardwired-Powered Deck-Mounted Low Body Faucet	View more info
	EBF-615	Optima® Battery-Powered Deck-Mounted Low Body Faucet	View more info
	EBF-625	Optima® Battery-Powered Deck-Mounted Low Body BAA Compliant Faucet	View more info

Sloan 10500 Seymour Ave, Franklin Park, IL 60131
Phone: 800.982.5839 • Fax: 800.447.8329 • sloan.com