BASYS® Low Faucets
EFX-300.200.0000 PVDBN

▶ Code Number
3324389

▶ Description
Sensor Metering Handwashing Faucet, line powered with battery back-up, double-infrared sensor activated for pre-tempered or hot and cold water operation.

▶ Flow Rates
0.5 gpm /1.9 Lpm

▶ Faucet Specifications
Sensor-activated, electronic, chrome plated die cast body, handwashing faucet with the following features:

- One tool service
- All wetted components to be stainless steel, engineered thermoplastic, EPDM, and copper or copper alloy
- Solenoid housed in removable carrier that includes supply strainer, serviceable from above deck
- Mechanical mixing, integral to spout, optional
- Vandal resistant spray insert, key housed inside faucet body
- All electronics sealed to IP-67
- Gold plated electrical contacts
- Above deck individual diagnostic indicators for battery life, solenoid condition, and power up mode
- Flexible, high pressure supply hoses, 3/8" compression connections
- Bi-stable magnetic solenoid
- Double infrared sensors with automatic setting feature
- Single hole installation
- Includes all mounting hardware
- Selectable Sloan programmable line purge mode eliminates stagnant water
- Operates from 1 to 125 psi
- Adjustable run time from 0-3600 seconds (Factory set at 10 second maximum run time upon continuous detection)

▶ Variations
BDT - Below Deck Thermostatic Mixing Valve

Brushed Nickel (BN / PVD Finish)

▶ CALGreen
This BASYS faucet with a 10-second cycle uses 0.083 gallons of water at 0.5 gallons per minute (exceeds minimum CALGreen requirements) or 0.25 gallons of water at 1.5 gallons per minute, depending upon desired flow rate. Additionally, this BASYS faucet is Sloan reprogrammable to use 0.175 gallons of water at 1.5 gallons per minute with a 7-second cycle (exceeds minimum CALGreen requirements).

▶ Legislative Compliance
Federal Reduction of Lead in Drinking Water Act Law 111-380 (contains no more than 0.25% weighted average lead content), Section 116875 of the California Health & Safety Code, and Vermont Lead Reduction Law (Vermont Act 193).

ADA Compliant



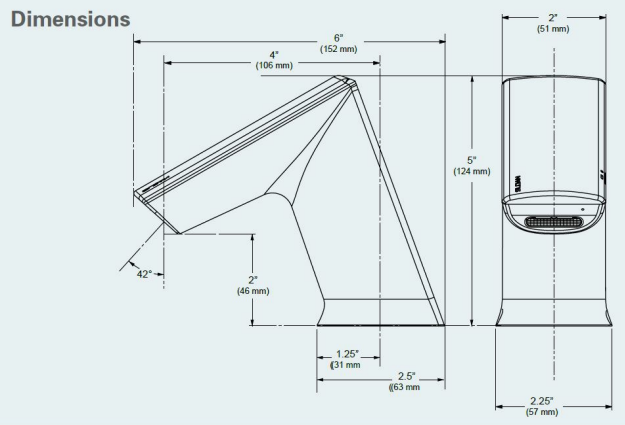

▶ BASYS Spec Language
Sloan BASYS model no. EFX-300.____._____ double infrared sensor-activated electronic handwashing faucet with battery back-up and line purge mode for pre-tempered or hot/cold water supplies. Product to have double infrared sensors with automatic setting feature. Solenoid valve housed in removable carrier that closes water supply upon removal eliminating need to access control stops. Solenoid carrier includes strainer for easy above-deck service. Optional thermostatic mixer complies with ASSE 1070 requirements.

▶ Compliance & Certifications
IAPMO/cUPC, UL (adapters), CE (adapters), Commonwealth of Massachusetts

UPC, IPC, NPC Canada, California Green Building Code (CALGreen), City of Los Angeles Water Efficiency Ordinance

ASME A112.18.1/CSA B125.1, NSF 372, ANSI/UL 1951, ICC/ANSI 117.1

LOW-LEAD UPC C ®

This space for Architect/Engineer Approval

▶ Base Plate Options (Digit 8)

- Base plate for 4" centerset sink

▶ Special Finish Options* (ordered separately, late 2013)

- Physical Vapor Desposition brushed stainless (Brushed Chrome)
- Physical Vapor Desposition Brushed Nickel
- Physical Vapor Desposition Polished Brass
- * Minimum order quantities and long lead times may apply. Please contact Customer Service for details.

▶ Adapter Options (Digit 9)

- Plug-In Voltage Adapter (US) 100-240 VAC
- Plug-In Voltage Adapter (UK) 100-240 VAC
- Plug-In Voltage Adapter (EU) 90-264 VAC
- Box-Mount Adapter 120 VAC

▶ Electrical Specifications

- Control Circuit – 6.75 VDC
- Power Supplies –Optional voltage adapters handle 100-264 VAC and 6 VDC Alkaline Battery Pack
- Sensor Range – Factory Setting: 4"- 5" (102-127 mm) Nominal Range Adjustment: 1"- 6" (25-150 mm) Nominal

▶ Accessories (ordered separately)

- Splitter (included in hardwire less adapter)
- 126" Extension Cable
- 11 13/16" Extension Cable
- 47 1/4" Extension Cable

EFX - 3 0 0 . 0 . 0

	Digit 1	Digit 2	Digit 3	Digit 4	Digit 5	Digit 6	Digit 7	Digit 8	Digit 9	Digit 10
Series	Body Type	Power Type	Crown Type	Mixer Type	Sensing Type	Flow Rate	Battery Type	Base Plate	Adapter	Drain Pop-Up
EFX	3 = Low IR	0 = Hardwire	0 = Bowed	0 = None	0 = Active IR	0 = 0.5 gpm Multi-Lam	0 = Alkaline	0 = None	0 = None	0 = No
				1 = BDM		2 = 1.5 gpm Aerated		1 = 4"	1 = EAF11	1 = Yes
				2 = BDT		3 = 1.5 gpm Laminar		2 = 8"	2 = EAF39	
				5 = ISM					3 = EAF41	
									4 = EAF37	

Mixer Type Options (Digit 4)

- ☐ BDM – Mechanical, below deck mixing valve
- ☐ BDT – Thermostatic, below deck mixing valve
- ☐ ISM – Integral side mixer

Flow Rate Options (Digit 6)

- ☐ 0.5 gpm/1.9 Lpm Multi-Lam Spray
- ☐ 1.5 gpm/5.7 Lpm Aerated Stream
- ☐ 1.5 gpm/5.7 Lpm Laminar Stream

Base Plate Options (Digit 8)

- ☐ Base plate for 4" centerset sink
- ☐ Base plate for 8" centerset sink

Adapter Options (Digit 9)

- ☐ EAF-11 – Plug-In Voltage Adapter (US) 100-240 VAC
- ☐ EAF-39 – Plug-In Voltage Adapter (UK) 100-240 VAC
- ☐ EAF-41 – Plug-In Voltage Adapter (EU) 90-264 VAC
- ☐ EAF-37 – Box-Mount Adapter 120 VAC

Special Finish Options* (ordered separately, late 2013)

- ☐ PVDSF – Physical Vapor Desposition Satin Finish (Brushed Chrome)
- ☐ PVDBN – Physical Vapor Desposition Brushed Nickel
- ☐ PVDPB – Physical Vapor Desposition Polished Brass

** Minimum order quantities and long lead times may apply. Please contact Customer Service for details.*

Accessories (ordered separately)

- ☐ EAF-23 – Splitter (included in hardwire less adapter)
- ☐ EAF-24-A – $11^{13}/_{16}$" Extension Cable
- ☐ EAF-25-A – $47^{1}/_{4}$" Extension Cable
- ☐ EAF-17-A – 126" Extension Cable

▶ ROUGH-IN

EFX-300.00X.0X1X Faucet
with Single Line Water Supply

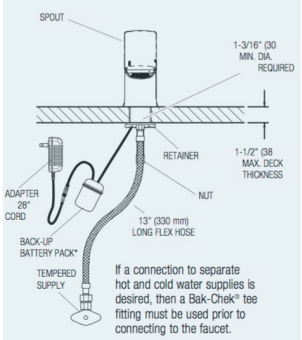

EFX-300.50X.0X1X Faucet
with Hot & Cold Water Supply

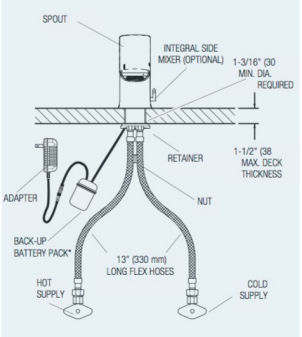

EFX-300.X0X.0X1X Faucet
with Hot & Cold Water Supply

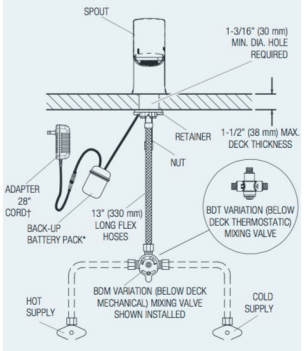

Electrical Connection for up to 6 Faucets
Can combine up to six (6) faucets using one adapter

