EAF-250-BAT-ISM-CP-0.35GPM-MLM-IR-IQ-LL-FCT

(General Model Name: EAF250-ISM CP LL BATTERY FAUCET 0.35 GPM)

CODE NUMBER

3335167

DESCRIPTION

Battery Power Supply, Integrated Side Mixer, Polished Chrome Finish, 0.35 gpm, Multi-Laminar Spray, Infrared Sensor, Optima® Battery-Powered Deck-Mounted Mid Body Faucet.

DETAILS

- Flow Rate: 0.35 gpm (1 Lpm) (0.35GPM)
- Spray Type: Multi-Laminar (MLM)
- Sensor Type: Infrared (IR)
- Mounting Type: Single Hole
- Power Supply: Battery (BAT)
- Temperature Mixer: Integrated Side Mixer (ISM)
- Finish: Polished Chrome (CP)
- Factory Default Timeout: 30s
- Factory Default GPC: 0.175

FEATURES

Commercial Grade, ADA Compliant, Electronic, Sensor-Activated, Cast Brass Hand Washing Faucet with the following features:

- Double Infrared Sensors with Automatic Setting Feature and Microprocessor
- Automatic Self-adapting Sensor Technology
- Low Battery Indicator
- Magnetic Solenoid Valve
- Water Supply Connection with Flexible High-pressure Hose and Strainer
- 6 volt Lithium CR-P2 Commercial Battery included
- Appropriate Mounting Hardware included
- IQ-Click feature permits activation of continuous run and temporary off modes
- Less Logo

ELECTRICAL SPECIFICATIONS

- Battery Life: 3 years 8,000 cycles/month
  - Optional power harvesting significantly extends service life
- Self-Adjustment Range: 0" (0mm)
- Sensor Range: 0" (0mm)
- Timeout Adjustment Settings: 30s

VIDEOS

PVD Special Finishes

DOWNLOADS

- EAF 200/225/250/275 Installation Instructions
- EAF 200/225/250/275 (SP) Installation Instructions
- Faucet Spray Heads Repair and Maintenance Guide
- Optima Plus EAF 250 Repair and Maintenance Guide
- Additional Downloads



Variations not shown: Less Logo and Integrated Side Mixer

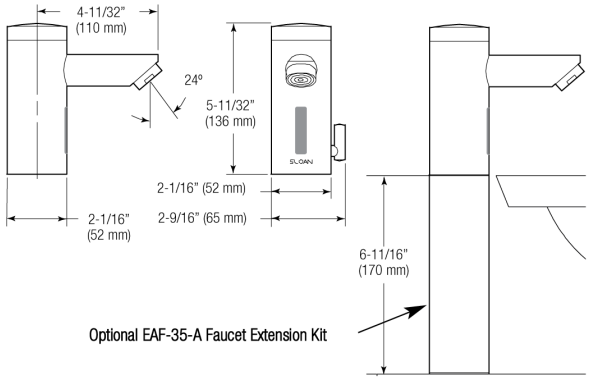

COMPLIANCES & CERTIFICATIONS

(ADA Compliant, ASME A112.18.1 Compliant, BREEAM Water Credit, CalGreen Compliant, CEC Compliant, cUPC Certified, cUPC Low Lead Compliant, Green Globes Water Credit, LEED V4 Water Efficiency Credit, NYC604.4, Proposition 65, Satisfies LEED Credits, TAS, UPC Certified, UPC Low Lead Compliant)

NOTES

All information contained within this document subject to change without notice.

Looking for other variations of the EAF-250 product? View the general spec sheet with all options.

Find a matching soap dispenser for this faucet.
Find a compatible sink for this faucet.

Sloan 10500 Seymour Ave, Franklin Park, IL 60131
Phone: 800.982.5839 • Fax: 800.447.8329 • sloan.com

WARRANTY

3 Year

ROUGH-IN

EAF-250
Faucets with Single Line Water Supply

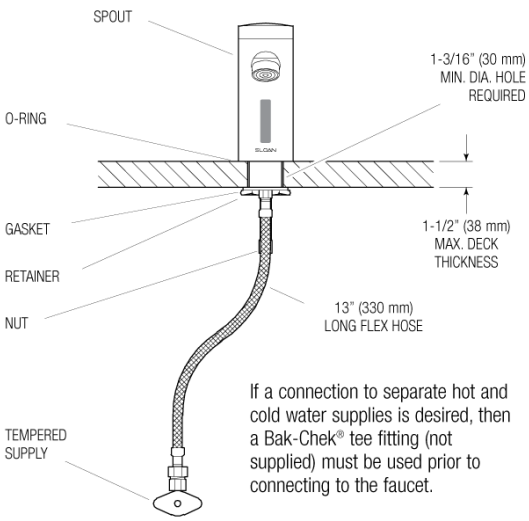

If a connection to separate hot and cold water supplies is desired, then a Bak-Chek® tee fitting (not supplied) must be used prior to connecting to the faucet.

EAF-250-ISM, EAF-250-ISM-IC AND
EAF-250-ISM-DPU-IC
Faucets with Hot and Cold Water Supply

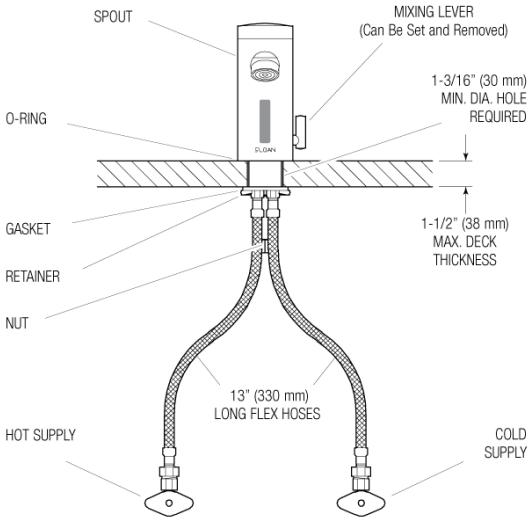

When the EAF faucet is installed on a sink that has three (3) hole punchings, a Trim Plate should be used. ***Trim Plates must be specified and ordered separately:***

ETF-312-A
Trim Plate for 4" (102 mm) Centerset Sink

ETF-510-A
Trim Plate for 8" (204 mm) Centerset Sink

Sloan 10500 Seymour Ave, Franklin Park, IL 60131
Phone: 800.982.5839 • Fax: 800.447.8329 • sloan.com