Sloan Lumino™ Faucet
EAF-225-P-ISM 1.0 GPM

▶ Code Number
3335130

▶ Description
6 VDC (nominal) Adapter Powered, Sensor Activated, Electronic Hand Washing Faucet for pre-tempered or hot and cold water operation with illuminated Temperature Indication Ring.

▶ Flow Rates
1.0 gpm/ 3.8 Lpm

▶ Specifications
Sensor Activated, Electronic, Chrome Plated Die-Cast Metal, Hand Washing Faucet with the following features:

- Indicates the adjusted water temperature via illuminated LED color changing ring
- Standby mode (option) permits light ring to remain illuminated with dim white light
- Soft-off function of indicator light. Light is turned off softly after the water flow stops
- Water Supply Connection with Flexible High-pressure Hose and Strainer
- Hot adjustable water limit set point
- Modular One-piece Construction with all Concealed Components above deck
- Double Infrared Sensors with Automatic Setting Feature and Microprocessor
- Magnetic Solenoid Valve
- Water temperature revealed by Illuminated Temperature Indication Ring
- Water temperature can be user adjusted
- Standby Mode permanently illuminates ring with dimmed white light
- Security-off after 1 minute of continuous water flow (vandal-resistant construction)
- Appropriate Mounting Hardware included

▶ Automatic Operation
Sloan's Lumino Deck-Mount Electronic Faucet operates by means of an infrared sensor.

▶ Accessories (Sold Separately)
- Trim Plates must be specified and ordered separately.
- See Accessories Section and OPTIMA® Accessories Section of the Sloan catalog for details on these and other OPTIMA® Flushometer variations.

▶ Control Circuit
6 VDC — Includes Auto Set Range Adjustment and Low Battery Indicator LED

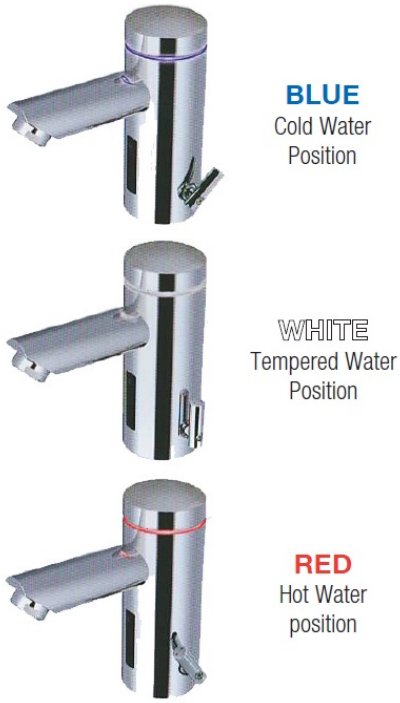

▶ Sloan's Lumino — complementing intelligence and operation within a restroom setting.
The Sloan Lumino Electronic Faucet visibly shines in it's ability to regulate water temperature. Sloan's Lumino is part of the Sloan Designer Series of fittings, designed to work in perfect unison with a restroom's décor.

▶ Hygienic
Touchless, sensor activation eliminates the need for user contact to help control the spread of infectious diseases.

▶ Aesthetic
The Sloan Lumino Deck-Mount Electronic Faucet brings Sloan's quality into a one-of-a-kind electronic sensor faucet that works in unison with virtually any restroom.

▶ Economical
Automatic operation provides water usage savings up to 40% over manually operated faucets. Sensor operation ensures reduced maintenance and operation costs.

▶ Compliance & Certifications
LOW-LEAD
UPC
C ®

ASME A112.18.1-2011/CSA B125.1-11, NSF372, ICC/ANSI 117.1

▶ OPERATION
As the user's hands enter the beam's effective range, the beam is reflected back into the sensor receiver and activates the solenoid valve allowing water to flow from the faucet. Water will flow until the hands are removed or until the faucet reaches its automatic time out limit setting.

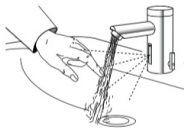

This space for Architect/Engineer Approval

SLOAN 10500 SEYMOUR AVE. ● FRANKLIN PARK, ● IL. 60131
Ph: 1-800-9-VALVE-9 or 1-847-671-4300 ● Fax: 1-800-447-8329 or 1-847-671-4380 ● http://www.sloan.com

▶ Sensor Range

Faucet Adaptive Self-adjustment Range: 2"-14" (51 mm -356 mm) nominal

Nominal: 4" - 5" (102 mm - 127 mm)

▶ Time Out Setting

2 minutes— Maximum time faucet will run upon continuous detection (except for i.q.-Click models that are otherwise set in continuous run).

▶ ROUGH-IN

EAF-225-ISM, EAF-225-ISM-IC AND EAF-225-ISM-DPU-IC Faucets with Hot and Cold Water Supply

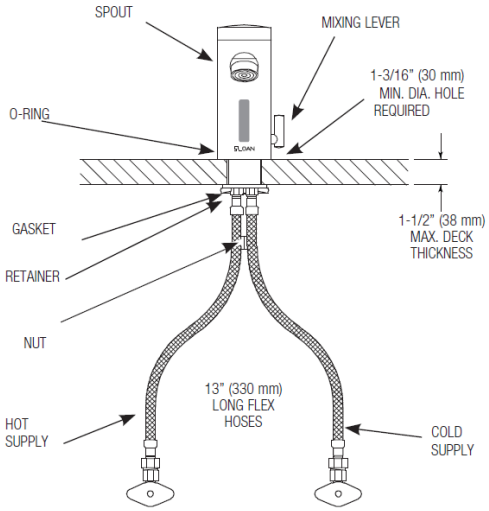

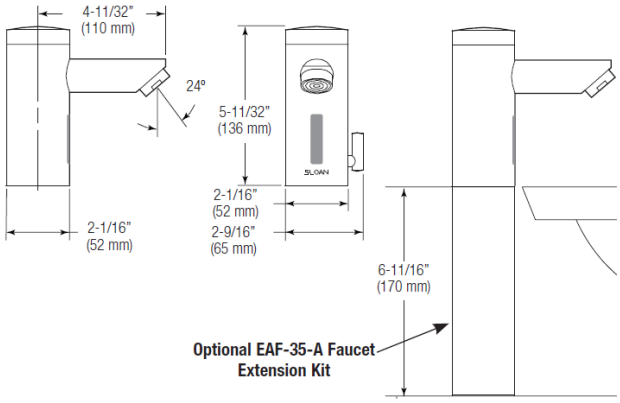

When the EAF faucet is installed on a sink that has three (3) hole punchings, a Trim Plate should be used. Trim Plates must be specified and ordered separately:

ETF-312-A
Trim Plate for 4" (102 mm) Centerset Sink

ETF-510-A
Trim Plate for 8" (204 mm) Centerset Sink