EAF-200-HLT-ISM-CP-0.35GPM-AER-IR-IQ-FCT

(General Model Name: EAF200-LT-ISM CP ELECT FAUCET (IQ))

CODE NUMBER

3335172

DESCRIPTION

Hardwired Less Transformer Power Supply, Integrated Side Mixer, Polished Chrome Finish, 0.35 gpm, Aerated Spray, Infrared Sensor, Optima® Hardwired-Powered Deck-Mounted Mid Body Faucet.

DETAILS

- Flow Rate: 0.35 gpm (1 Lpm) (0.35GPM)
- Spray Type: Aerated (AER)
- Sensor Type: Infrared (IR)
- Mounting Type: Single Hole
- Power Supply: Hardwired Less Transformer (HLT)
- Temperature Mixer: Integrated Side Mixer (ISM)
- Finish: Polished Chrome (CP)
- Factory Default Timeout: 30s
- Factory Default GPC: 0.25

FEATURES

Commercial Grade, ADA Compliant, Electronic, Sensor-Activated, Cast Brass Hand Washing Faucet with the following features:

- Double Infrared Sensors with Automatic Setting Feature and Microprocessor
- Automatic Self-adapting Sensor Technology
- Magnetic Solenoid Valve
- Water Supply Connection with Flexible High-pressure Hose and Strainer
- 6 Volt DC Plug-in Adapter (must be ordered separately for Less Adapter/Transformer (-LT) faucets)
- Appropriate Mounting Hardware included
- IQ-Click feature permits activation of continuous run and temporary off modes
- Daisy Chain Electrical Splitter Cable included with Less transformer (-LT) faucets

ELECTRICAL SPECIFICATIONS

- Self-Adjustment Range: 2"–14" (51–356mm)
- Sensor Range: 4"–5" (102–127mm)
- Timeout Adjustment Settings: 30s

DOWNLOADS

- EAF 200/225/250/275 Installation Instructions
- EAF 200/225/250/275 (SP) Installation Instructions
- Faucet Spray Heads Repair and Maintenance Guide
- Optima Plus EAF 200 Repair and Maintenance Guide
- Additional Downloads



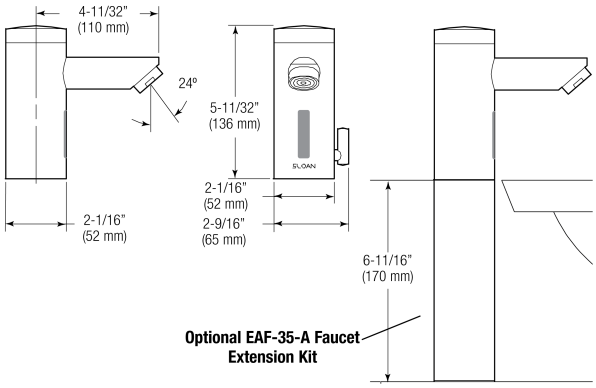

COMPLIANCES & CERTIFICATIONS

(ADA Compliant, ASME A112.18.1 Compliant, BREEAM Materials Credit, BREEAM Water Credit, CEC Compliant, cUPC Certified, cUPC Low Lead Compliant, EPD, Green Globes Materials & Resources Credit, Green Globes Water Credit, HPD, LEED Materials & Resources EPD Credit, LEED Materials & Resources HPD Credit, NYC604.4, Proposition 65, Satisfies LEED Credits, TAS, UPC Certified, UPC Low Lead Compliant)

NOTES

All information contained within this document subject to change without notice.

Looking for other variations of the EAF-200 product? View the general spec sheet with all options.

Find a matching soap dispenser for this faucet.
Find a compatible sink for this faucet.

Sloan 10500 Seymour Ave, Franklin Park, IL 60131
Phone: 800.982.5839 • Fax: 800.447.8329 • sloan.com

WARRANTY

3 Year

ROUGH-IN

EAF-200
Faucets with Single Line Water Supply

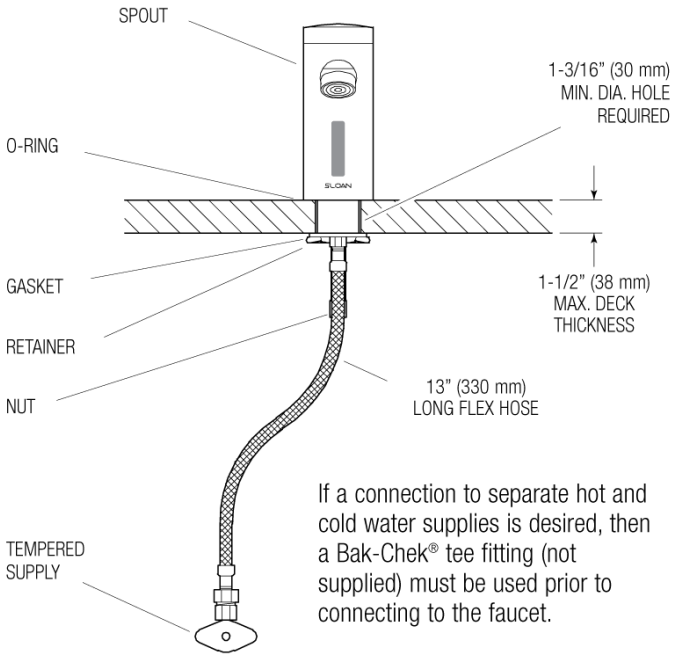

If a connection to separate hot and cold water supplies is desired, then a Bak-Chek® tee fitting (not supplied) must be used prior to connecting to the faucet.

EAF-200-ISM, EAF-200-ISM-IC AND
EAF-200-ISM-DPU-IC
Faucets with Hot and Cold Water Supply

