# EFX-650-BAT-BDT-CP-1.5GPM-IR-FCT

(General Model Name: EFX650.202.0000 CP SENSOR FAUCET)

## CODE NUMBER

3324349

## DESCRIPTION

Battery Power Supply, Below Deck Thermostatic Mixing Valve, Polished Chrome Finish, 1.5 gpm, Aerated (installed) or Laminar (in box) Spray, Infrared Sensor, BASYS® Battery-Powered Deck-Mounted Low Integrated Base Body Faucet.

## DETAILS

- Flow Rate: 1.5 gpm (6 Lpm) (1.5GPM)
- Spray Type: Aerated (installed) or Laminar (in box)
- Sensor Type: Infrared (IR)
- Mounting Type: Single Hole
- Power Supply: Battery (BAT)
- Temperature Mixer: Below Deck Thermostatic Mixing Valve (BDT)
- Finish: Polished Chrome (CP)
- Factory Default Timeout: 10s
- Factory Default GPC: 0.75

## FEATURES

Commercial Grade, ADA Compliant, Electronic, Sensor-Activated, Die-CastMetal Hand Washing Faucet with the following features:

- Solenoid housed in removable carrier that includes supply strainer
- Integral water supply shut off
- Supply strainer serviceable from above deck
- Vandal resistant spray insert, key housed inside faucet body
- All electronics sealed to IP-85
- Gold plated electrical contacts
- Above deck individual diagnostic indicators for battery life, solenoid condition, and power-up mode
- Flexible, high pressure supply hoses, 3/8” compression connections
- Bi-stable magnetic solenoid
- Four (4) “AA” alkaline batteries
- Double infrared sensors with automatic setting feature
- Integral 4-inch base
- Includes all mounting hardware
- Line Purge mode, eliminates stagnant water
- Standard Bowed Crown

## ELECTRICAL SPECIFICATIONS

- Battery Life: 3 years 8,000 cycles/month
  - Optional power harvesting significantly extends service life
- Self-Adjustment Range: 0" (0mm)
- Sensor Range: 0" (0mm)
- Timeout Adjustment Settings: 10s

## VIDEOS

BASYS® Faucet Installation and Features



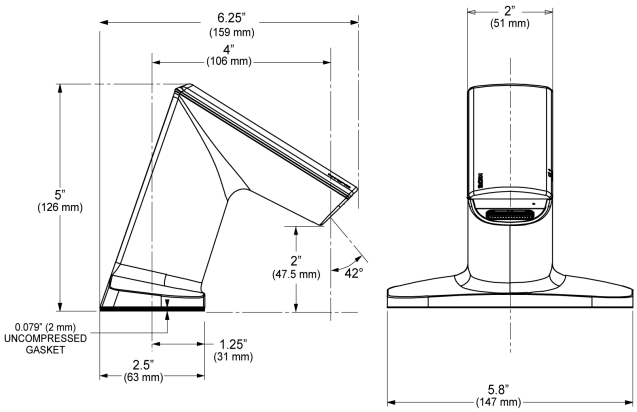


## COMPLIANCES & CERTIFICATIONS

(ADA Compliant, ASME A112.18.1 Compliant, CEC Compliant, cUPC Certified, cUPC Low Lead Compliant, Proposition 65, TAS, UPC Certified, UPC Low Lead Compliant)

## RECOMMENDED SPECIFICATION

Sloan BASYS Model No. EFX-650-BAT-BDT-CP-1.5GPM-AER-IR-FCT Infrared Sensor Activated Electronic Handwashing Faucet for pretempered or hot/cold water supplies. Product to have double infrared sensors with automatic setting feature. Solenoid valve housed in removable carrier that closes water supply upon removal eliminating, need to access control stops. Solenoid carrier includes strainer for easy above deck service. Thermostatic mixer ordered separately to comply with ASSE 1070 requirements. The product shall be tested and certified to industry standards: ASME A112.18.1M, CSA B125.1, California Health and Safety Code 116875

## NOTES

All information contained within this document subject to

**Sloan 10500 Seymour Ave, Franklin Park, IL 60131**
Phone: 800.982.5839 • Fax: 800.447.8329 • sloan.com

## DOWNLOADS

- EFX 3Xx/6Xx Active IR Installation Instructions
- EFX 3Xx/6Xx Active IR (SP) Installation Instructions
- Trim Plates Repair and Maintenance Guide
- IR FAQs Repair and Maintenance Guide
- IR FAQs SP Repair and Maintenance Guide
- EFX-6XX Repair and Maintenance Guide
- Additional Downloads

## ROUGH-IN

**EFX-650.X0X.0000. Faucet**
with hot and cold water supply

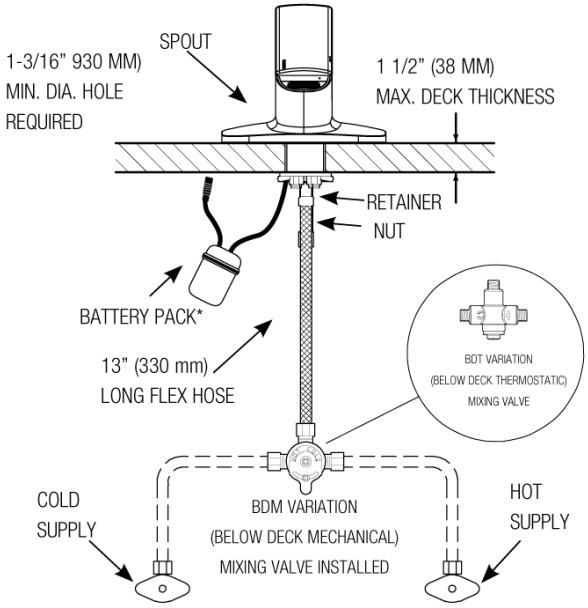


*One (1) faucet per battery pack

**EFX-650.X0X.0000 Faucet**
with single line water supply

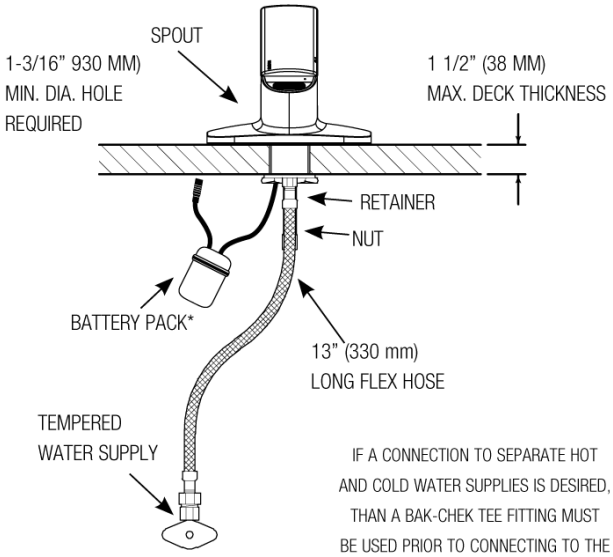


IF A CONNECTION TO SEPARATE HOT AND COLD WATER SUPPLIES IS DESIRED, THAN A BAK-CHEK TEE FITTING MUST BE USED PRIOR TO CONNECTING TO THE FAUCET.

change without notice.

Looking for other variations of the EFX-650 product? View the general spec sheet with all options.

Find a matching soap dispenser for this faucet.
Find a compatible sink for this faucet.

## WARRANTY

3 Year