Sloan Solis® Faucet EAF275-ISM PVDSF BATTERY FAUCET W/MIX

▶ Code Number
3335092

▶ Description
Solar Powered, Sensor Activated Electronic Hand Washing Faucet for pre-tempered or hot and cold water operation.

▶ Flow Rates
EAF-12 0.5 gpm/1.9 Lpm Multi-Stream Laminar Spray Head

▶ Specifications
Solar Powered, Sensor Activated, Electronic, Chrome Plated Constructed Metal, Hand Washing Faucet with the following features:

- Modular One-piece Construction with all Concealed Components above deck
- Double infrared sensors with automatic setting feature
- Automatic Self-adapting Sensor Technology
- Solar Powered
- Magnetic Solenoid Valve
- Water Supply Connection with Flexible High-pressure Hose and Strainer
- Appropriate Mounting Hardware included
- Includes 6 VDC Lithium Battery Back-up Power Source

▶ Special Finishes
Brushed Stainless (PVD finish)

▶ Variations
ISM - Integral Side Mixer

▶ Time Out Setting
30 seconds — Maximum time faucet will run upon continuous detection

▶ Control Circuit
6 VDC — Includes Auto Set and Range Adjustment LED

▶ Sensor Range
Faucet Adaptive Self-adjustment Range: 2"-14" (51 mm -356 mm) nominal

Nominal: 4" - 5" (102 mm - 127 mm)

▶ Power Supply
6 VDC Solar Energy Module with 6 VDC Lithium Battery Back-up Power Source



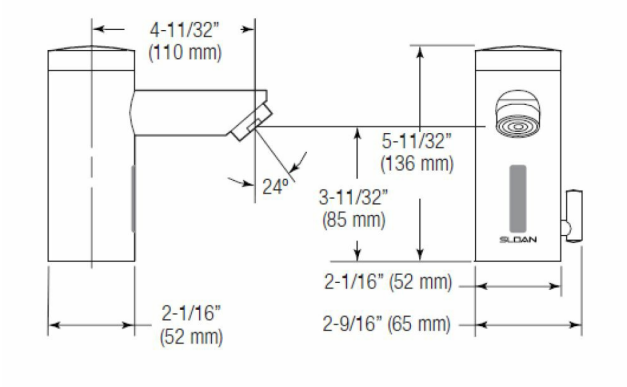

▶ The new Optima solar powered faucet — Bringing intelligence to water
The first solar powered electronic faucet's integrated power plant transforms light into electrical energy. Optimal performance any place, any time

Sloan's new Optima EAF-275 Series electronic hand washing faucets operate by means of a dual infrared sensor and microprocessor based logic. The modular design incorporates all of the operating components of the faucet, including the sensor, solenoid, circuitry and solar energy module above the sink within a die-cast metal spout.

ISM models feature an integral temperature control lever which allows the user to adjust the water temperature. This adjustment can also be converted to a fixed setting. EAF faucets ordered without the ISM variation must be connected to a single, pre-tempered water supply.

▶ Compliance & Certifications
ASME A112.18.1-2011/CSA B125.1-11, NSF372, ICC/ANSI 117.1

CEC Compliant

0.25 GPC

CALGreen

LOW-LEAD

This space for Architect/Engineer Approval

SLOAN 10500 SEYMOUR AVE. ● FRANKLIN PARK, ● IL. 60131
Ph: 1-800-9-VALVE-9 or 1-847-671-4300 ● Fax: 1-800-447-8329 or 1-847-671-4380 ● http://www.sloan.com

EAF-275
Faucet with Single Line Water Supply

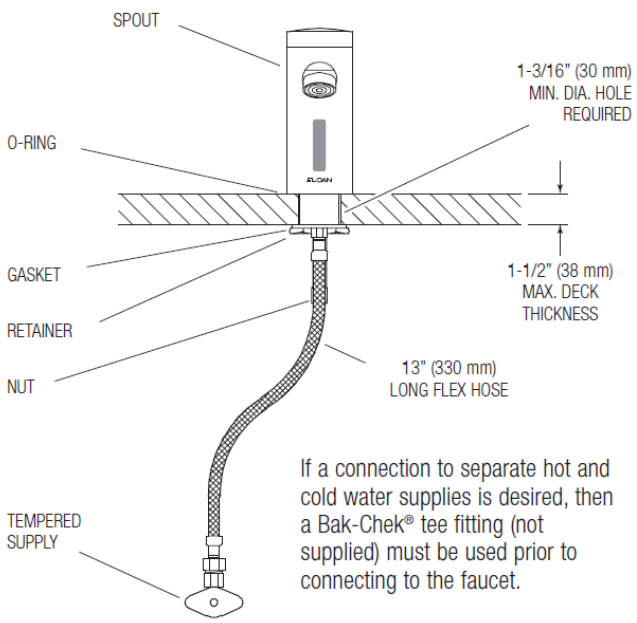

If a connection to separate hot and cold water supplies is desired, then a Bak-Chek® tee fitting (not supplied) must be used prior to connecting to the faucet.

EAF-275-ISM
Faucet with Hot and Cold Water Supply

