Optima Plus® Faucet
EAF-350-ISM 0.35 GPM

▶ Code Number
3335159

▶ Description
Battery-Powered, Sensor-Activated, Electronic Hand Washing Faucet for pre-tempered or hot and cold water operation.

▶ Flow Rates
0.5 gpm/1.9 Lpm Vandal Resistant Spray Head

▶ Specifications
Sensor-Activated, Electronic, Chrome Plated Die-Cast Metal, Hand Washing Faucet with the following features:

- Appropriate Mounting Hardware included
- Water Supply Connection with Flexible High-pressure Hose and Strainer
- Modular One-Piece Construction with all Serviceable Components above deck
- Temperature Adjustable (with mixer)
- Double Infrared Sensor with Automatic Setting Feature and Microprocessor
- Adjustable Hot Water Limit Set (with ISM Mixer)
- IR-Click feature
- 6 volt Lithium CR-P2 Commercial Battery included
- Bi-stable Magnetic Solenoid Valve

▶ Accessories (Sold Separately)
Trim Plates must be specified and ordered separately.



▶ The new Optima® Plus EAF-350 faucet — Bringing intelligence to water
Sloan's new EAF-350 series electronic hand washing faucets operate by means of a dual infrared sensor and microprocessor based logic. The modular design incorporates all the operating components of the faucet, including the sensor, solenoid, circuitry and battery above the sink deck within a die-cast metal spout.

ISM models feature an integral temperature control lever which allows the user to adjust the water temperature. This adjustment can also be converted to a fixed setting. EAF faucets ordered without the ISM variation must be connected to a single, pre-tempered water supply.

The IR-click feature allows the user to place the faucet into optional function modes, including "continuous run" and "temporary off" simply by activating the IR LED on the sensor window. The Optima® Plus EAF-350 series faucets include a 6 VDC lithium battery. Battery life is approximately three (3) years.

▶ Compliance & Certifications
ASME A112.18.1-2011/CSA B125.1-11, NSF372, ICC/ANSI 117.1

CEC Compliant

0.25 GPC

CALGreen

LOW-LEAD

This space for Architect/Engineer Approval

▶ IR-Click Feature
The IR-Click is a detector located in the sensor window of the faucet

▶ Control Circuit

6 VDC — Includes Auto Set Range Adjustment and Low Battery Indicator LED

▶ Sensor Range

Nominal: 4" - 6" (100-150 mm)

Adjustable by IR-Click: 2-1/2" - 7-1/2" (60-200 mm)

▶ Power Supply

6 VDC Lithium CR-P2 battery Approximate 3 year life

▶ Time Out Setting

30 seconds — Maximum time faucet will run upon continuous detection

▶ OPERATION

As the user's hands enter the beam's effective range, the beam is reflected back into the sensor receiver and activates the solenoid valve allowing water to flow from the faucet. Water will flow until the hands are removed or until the faucet reaches its automatic timeout limit setting.

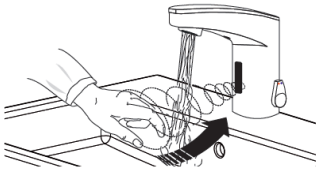

spout that allows the user to place the faucet into the following function modes: Continuous Run, Temporary Off and Auto Backround Adjustment.

Function	Press Button	LED Signal
Temporary OFF (2 min)	1. 1 time for 2 seconds 2. 2 times (double push)	1. LED Green (1) 2. LED Red pulsating flashes
reset:	1 time or will reset automatically after 2 mins	
Continuous Run 2 minute default setup (adjustable from 1-20 mins)	1. 1 time for 2 seconds 2. 1 time for 3-5 seconds	1. LED Green (1) 2. Water flows after releasing
reset:	1 time or will reset automatically after 2 mins	
Auto Backround Adjustment	1. 1 time for 2 seconds 2. 2 times (double push) 3. 1 time for 5 seconds then hold till requested range is reached 4. Release	1. LED Green (1) 2. LED Red blinks 3. LED Red (1-8) 4. LED Green (1)

▶ ROUGH-IN

EAF-350
1.5 gpm (5.6 Lpm) Max. Flow or
0.5 gpm (1.9 Lpm) Max. Flow
Faucets with Single Line Water Supply

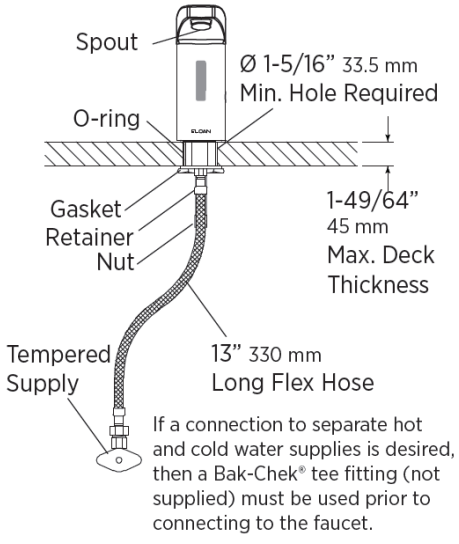

If a connection to separate hot and cold water supplies is desired, then a Bak-Chek® tee fitting (not supplied) must be used prior to connecting to the faucet.

EAF-350-ISM
1.5 gpm (5.6 Lpm) Max. Flow or
0.5 gpm (1.9 Lpm) Max. Flow
Faucets with Hot/Cold Water Supply

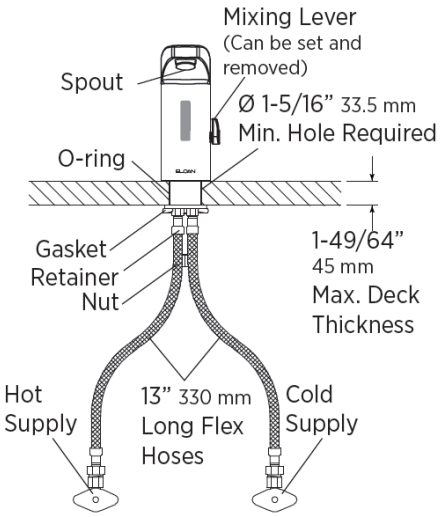

Side View

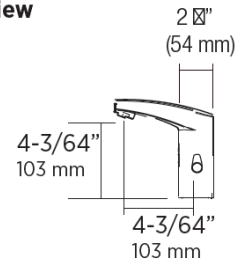

Front View

