Faucet and Soap Dispenser Combination
ESD-1501

▶ Code Number
3346092

▶ Description
The ESD-1501 is part of Sloan's new line of matching combination soap dispensers and faucets. They are easy to order kits for any bathroom. The soap dispenser uses a replaceable soap refill bottle with easy release collar for fast soap refill changes. The sensor technology offers a hands-free operation by delivering a pre-measured foam soap application "on demand". The faucet is Sloan's EAF-150-ISM. The ESD-1500 is also available for sale without faucet.

Contains:

- 1-EAF150-ISM Chrome Faucet (3335001)
- 1-ESD-1500 Soap Dispenser (3346093)
- 1-ESD-321 2 pack of 1500ml foam soap (3346044)



▶ Faucet
- Sensor Activated Electronic Hand Washing Faucet for pre-tempered or hot and cold water operation.
- Flow rate 1.5 gpm/ 5.7 Lpm – Spray Head
- Modular One-piece Construction with all Concealed Components above deck
- Double Infrared Sensors with Automatic Setup and Indicator Light
- Automatic Self-adapting Sensor Technology
- Low Battery Indicator
- Bi-stable Magnetic Solenoid Valve
- Water Supply Connection with Flexible High-pressure Hose and Strainer
- Optional 24 Hour Sentinel Activation

▶ Faucet Electrical Specifications
- 6 Volt Lithium 2CR5 Commercial Battery included
- 6 VDC Lithium 2CR5 battery. Approximate 3 year life
- Sensor Range Nominal: 4" - 5" (102 mm - 127 mm) Faucet Adaptive Self-adjustment Range: 2"-14" (51 mm -356 mm) nominal

▶ Soap Dispenser Electrical Specifications
- Ships with battery pack (4 "D" Alkaline batteries included)
- Optional AC adaptor can be purchased separately (part number 0346090)
- Sensor range – nominal 5"
- GFI outlet suggested per code
- 120V/15 Amp

▶ Soap Dispenser
- Modular one-piece construction is easy to install on a sink deck surface
- All electronics in spout are sealed
- Designed for drip free foam dispensing operation
- Motor Assembly suspended under counter connected to soap dispenser spout
- Motor Assembly rotates 360 degrees for easy installation
- Battery life of 45,000 activations
- 1,500 dispenses per foam soap bottle
- Ships with 2 bottles of non-scented, non-colored foam soap (1500ml per bottle)
- Additional foam soap can be purchased through Sloan (ESD-321) or GOJO distribution (8565-02-N6300GN)

▶ Compliance & Certifications
CEC Compliant

This space for Architect/Engineer Approval

Faucet and Soap Dispenser Combination
ESD-1501

EAF-150 AND EAF-150-IC
Faucets with Single Line Water Supply

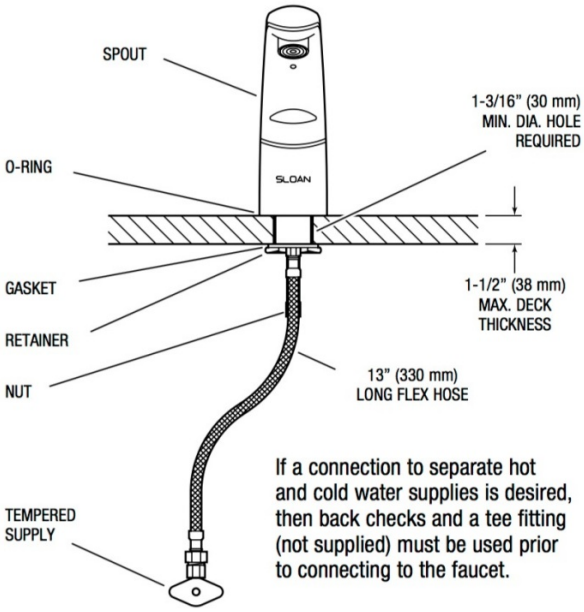

EAF-150-ISM, EAF-150-ISM-IC AND
EAF-150-ISM-DPU-IC
Faucets with Hot and Cold Water Supply

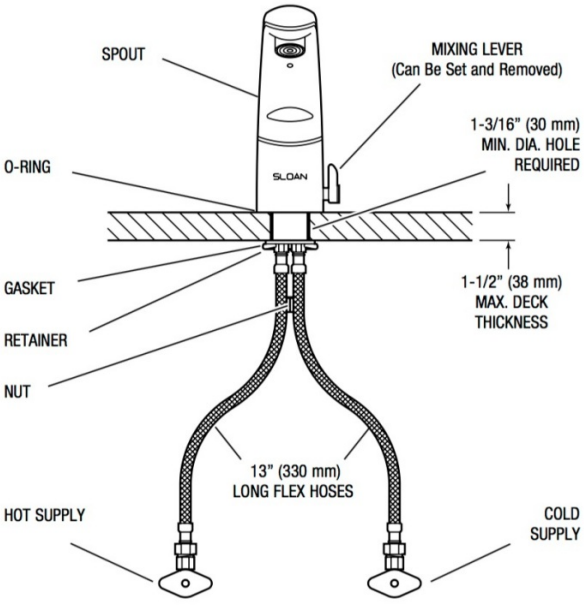

EAF-150-ISM Faucet

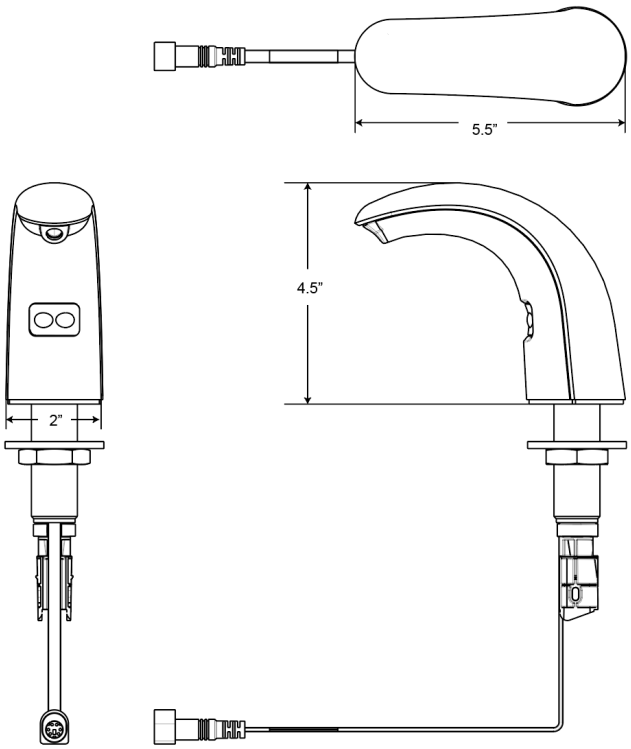

ESD-1500 Soap Dispenser