BASYS® High Faucets
EFX 175.502.0100

▶ Code Number
3324028

▶ Flow Rates
1.5 gpm / 5.7 Lpm – Spray Head

▶ Description
Sensor Metering Handwashing Faucet, solar powered with battery back-up, double-infrared sensor activated for pre-tempered or hot and cold water operation. All serviceable components above deck for easy installation and maintenance.

▶ Faucet Specifications
- All serviceable components above deck
- One tool service
- All wetted components to be stainless steel, engineered thermoplastic, EPDM, and copper or copper alloy
- Solenoid housed in removable carrier that includes supply strainer, serviceable from above deck
- Mechanical mixing, integral to spout, optional
- Vandal resistant spray insert, key housed inside faucet body
- All electronics sealed to IP-67
- Gold plated electrical contacts
- Above deck individual diagnostic indicators for battery life, solenoid condition, and power up mode
- Flexible, high pressure supply hoses, 3/8" compression connections
- Bi-stable magnetic solenoid
- Double infrared sensors with automatic setting feature
- Single hole installation
- Includes all mounting hardware
- Selectable Sloan programmable line purge mode eliminates stagnant water
- Operates from 1 to 125 psi
- Adjustable run time from 0-3600 seconds (Factory set at 10 second maximum run time upon continuous detection)
- Faucet can be configured to add solar or solar and LCD display
- Solar powered, sensor-activated, electronic, chrome plated die cast body, handwashing faucet with the following features:
- Four (4) "AA" alkaline batteries (act as back-up)

▶ Variations
4 - 4" Trim Plate

Polished Chrome

Integrated Side Mounted Mechanical Mixing Valve

▶ CALGreen
This BASYS faucet with a 10-second cycle uses 0.083 gallons of water at 0.5 gallons per minute (exceeds minimum CALGreen requirements) or 0.25 gallons of water at 1.5 gallons per minute, depending upon desired flow rate. Additionally, this BASYS faucet is Sloan reprogrammable to use 0.175 gallons of water at 1.5 gallons per minute with a 7-second cycle (exceeds minimum CALGreen requirements).

▶ Legislative Compliance
Federal Reduction of Lead in Drinking Water Act Law 111-380 (contains no more than 0.25% weighted average lead content), Section 116875 of the California Health & Safety Code, and Vermont Lead Reduction Law (Vermont Act 193).



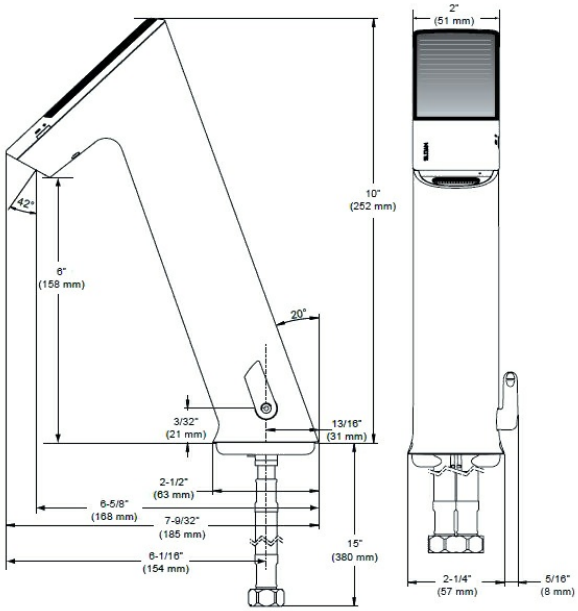

▶ BASYS Spec Language
Sloan BASYS model no. EFX-175.____._____ double infrared sensor-activated electronic handwashing faucet with battery back-up and line purge mode for pre-tempered or hot/cold water supplies. Product to have double infrared sensors with automatic setting feature. Solenoid valve housed in removable carrier that closes water supply upon removal eliminating need to access control stops. Solenoid carrier includes strainer for easy above-deck service. Optional thermostatic mixer complies with ASSE 1070 requirements.

▶ Compliance & Certifications
IAPMO/cUPC, Commonwealth of Massachusetts

UPC, IPC, NPC Canada, California Green Building Code (CALGreen), City of Los Angeles Water Efficiency Ordinance

ASME A112.18.1/CSA B125.1, NSF 372, ANSI/UL 1951, ICC/ANSI 117.1

LOW-LEAD

This space for Architect/Engineer Approval

▶ Base Plate Options (Digit 8)

- Base plate for 4" centerset sink
- Base plate for 8" centerset sink

▶ Special Finish Options* (ordered separately, late 2013)

- Physical Vapor Desposition brushed stainless (Brushed Chrome)
- Physical Vapor Desposition Brushed Nickel
- Physical Vapor Desposition Polished Brass
- * Minimum order quantities and long lead times may apply. Please contact Customer Service for details.

▶ Electrical Specifications

- Control Circuit – 6.75 VDC
- Sensor Range – Nominal: 4"- 5" (102-127 mm) Faucet Adaptive Self-Adjustment Range: 2"- 14" (51-356 mm) nominal
- Battery Life – 3-years under worst case conditions of 8,000 cycles per month and high water pressure without power harvesting. Power harvesting should extend service life of batteries.
- Power Supplies – 6 VDC Solar Energy Module with 6 VDC Alkaline Battery Pack

▶ Mixer Type Options (Digit 4)

- ISM – Integral side mixer

▶ ROUGH-IN

EFX-175.00X.0X0X Faucet
with Single Line Water Supply

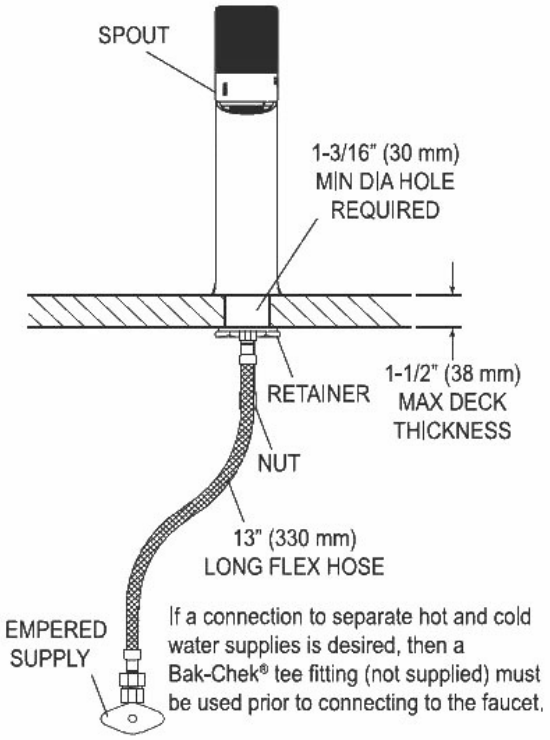

EFX-175.50X.0X0X Faucet
with Hot & Cold Water Supply

