CODE NUMBER

3365558BT

DESCRIPTION

4" Trim Plate, Plug Adapter Power Supply, Back-Check Tee, Polished Chrome Finish, 1.0 gpm, Laminar Spray, Infrared Sensor, Smart Faucet, Optima® Hardwired-Powered Deck-Mounted Gooseneck Body Faucet.

DETAILS

- Flow Rate: 1.0 gpm (4 Lpm) (1.0GPM)
- Spray Type: Laminar (LAM)
- Sensor Type: Infrared (IR)
- Mounting Type: 4" Centerset
- Trim Plate: 4" (102mm) (4)
- Power Supply: Plug Adapter (PLG)
- Temperature Mixer: Back-Check Tee (TEE)
- Finish: Polished Chrome (CP)
- Factory Default Timeout: 30s
- Factory Default GPC: 1.0

FEATURES

Commercial Grade Faucet, ADA Compliant, Cast Brass Spout, Quick Connect Fittings, Integrated Water Shut-off, Wireless Settings Adjustment, On-demand or Metered activation, Hygienic Line Flush, Water Usage and Battery Strength Reporting, Self-adapting Sensor

ELECTRICAL SPECIFICATIONS

- Battery Life: 3 years 8,000 cycles/month
  - Optional power harvesting significantly extends service life
- Self-Adjustment Range: 0" (0mm)
- Sensor Range: 0" (0mm)
- Timeout Adjustment Settings: 30s

POWER SUPPLY OPTIONS

- 6VDC Plug Adapter (included with PLG models)
- 6VDC Ganged Adapter Kit (up to 6 units)(sold separately)
- 24VAC Box Transformer (included with BOX models)

VIDEOS

- Optima Faucet App
- Sloan Optima Below Deck Faucet

DOWNLOADS

- Optima Smart Faucet Below Deck Installation Instructions
- Trim Plates Repair and Maintenance Guide
- Faucet Spray Heads Repair and Maintenance Guide
- ETF-770/EBF-775 Below Deck Repair and Maintenance Guide
- Additional Downloads



Variation not shown: 4" Trim Plate

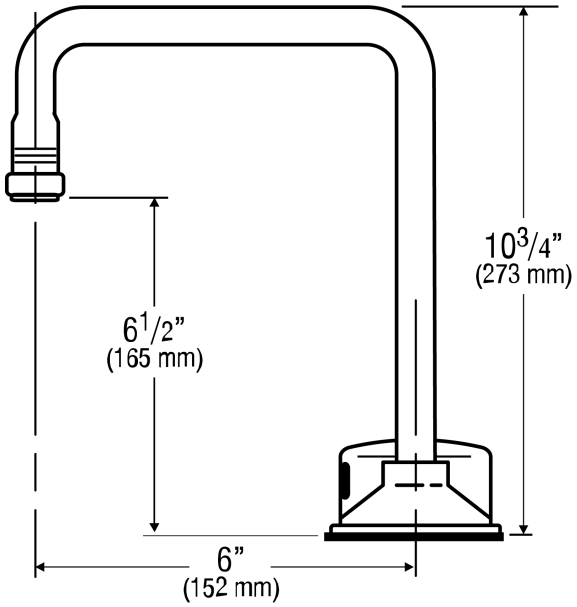

COMPLIANCES & CERTIFICATIONS

(ADA Compliant, ASME A112.18.1 Compliant, CEC Compliant, cUPC Certified, cUPC Low Lead Compliant, Proposition 65, TAS, UL Certified, UPC Certified, UPC Low Lead Compliant)

RECOMMENDED SPECIFICATION

Faucet shall include cast brass body, quick-connect fittings, twist-off/shut-off solenoid assembly, removable battery cartridge, flexible power supply and allow adjustment of settings wirelessly via Apple or Android smartphones.

Sloan 10500 Seymour Ave, Franklin Park, IL 60131
Phone: 800.982.5839 • Fax: 800.447.8329 • sloan.com

NOTES

All information contained within this document subject to change without notice.

Looking for other variations of the ETF-770 product? View the general spec sheet with all options.

Find a matching soap dispenser for this faucet.
Find a compatible sink for this faucet.

WARRANTY

3 Year

ROUGH-IN

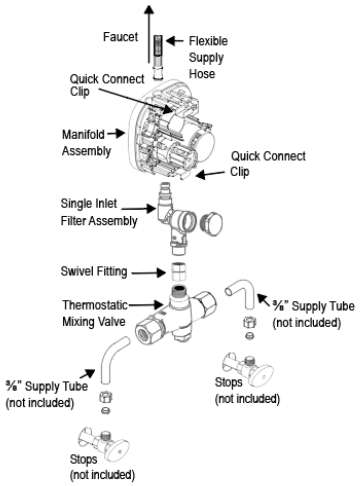

SINGLE INLET FILTER FITTING KIT WITH BELOW DECK THERMOSTATIC MIXING VALVE (BDT)

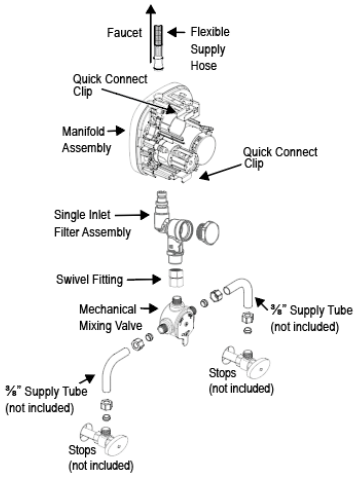

SINGLE INLET FILTER FITTING KIT WITH BELOW DECK MANUAL MIXING VALVE (BDM)

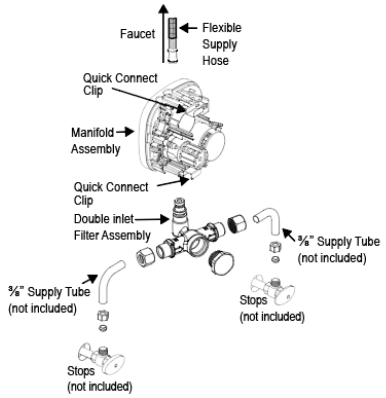

DOUBLE INLET FILTER FITTING