BASYS® Wall Mount Faucets
EFX-800.200.1000

▶ Code Number
3324338

▶ Description
Line powered, infrared sensor activated, electronic, chrome plated die cast body, wall mount hand washing faucet for pre-tempered water operation.

▶ Flow Rates
0.5 gpm /1.9 Lpm

▶ Specifications
- Line Powered, Sensor Activated, Electronic, Chrome Plated Die Cast Body, Hand Washing Faucet with the following features:
- One tool service
- All wetted components to be stainless steel, engineered thermoplastic, EPDM, and copper or copper alloy
- Solenoid housed in removable carrier that includes supply strainer
- Supply strainer serviceable from above deck
- Vandal resistant spray insert, key housed inside faucet body
- All electronics sealed to IP-67
- Gold plated electrical contacts
- Above deck individual diagnostic indicators for battery life, solenoid condition, and power up mode
- Double infrared sensors with automatic setting feature
- Includes all mounting hardware
- Line purge mode, eliminates stagnant water
- High temperature auto shut-off (LCD models)
- Faucet can be configured to add solar and/or LCD display
- Integral above deck water supply shut off
- Thermostatic, below deck for ASSE 1070 compliance, optional
- Above deck solenoid valve
- Adjustable time-outs and sleep/cleaning mode
- LCD display of water temperature and scrub time, optional
- One (1) CR-P2 battery
- Optional Wall Flange included
- Sleep/cleaning Mode
- Line powered using a variety of voltage adapters (battery acts as back-up)
- Bi-stable Magnetic Solenoid Valve

▶ Variations
Lithium Batteries

BDT - Below Deck Thermostatic Mixing Valve

▶ Control Circuit
6.75 VDC

▶ Battery Life
5-years under worst case conditions of 8,000 cycles per month and high water pressure. Optional power harvesting may extend service life of batteries to equal the shelf life.

▶ DIMENSIONS

▶ Solenoid Valve
Filtered Solenoid Valve with Serviceable Strainer Filter



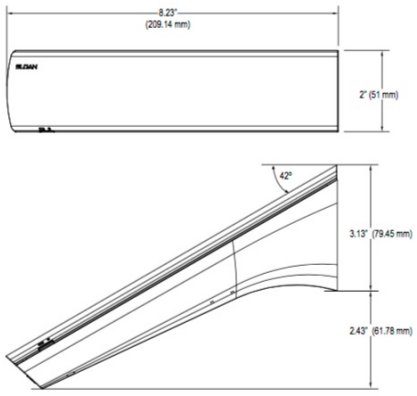

▶ BASYS Spec Language
Sloan BASYS Model No. EFX-800.____._____ Infrared Sensor Activated Electronic Handwashing Faucet for pre-tempered supplies. Solenoid valve housed in removable carrier that closes water supply upon removal, eliminating need to access control stops. Solenoid carrier includes mesh filter for easy access and service without disconnecting the supply lines. Thermostatic mixer ordered separately to comply with ASSE 1070 requirements. The product shall be tested and certified to industry standards: ASME A112.18.1M, CSA B125.1, California Health and Safety Code 116875 (AB1953-2006), and Vermont Bill S.152. This product meets ADA ANSI/ICC A117.1 requirements.

▶ Compliance & Certifications
CEC Compliant

IAPMO/cUPC, Commonwealth of Massachusetts

IAPMO/cUPC, UL (adapters), CE (adapters), Commonwealth of Massachusetts

UPC, IPC, NPC Canada, California Green Building Code (CALGreen), City of Los Angeles Water Efficiency Ordinance ASME A112.18.1/CSA B125.1, NSF 372, ANSI/UL 1951, ICC/ANSI 117.1

Optional thermostatic mixer complies with ASSE 1070 requirements.

This space for Architect/Engineer Approval

SLOAN 10500 SEYMOUR AVE. ● FRANKLIN PARK, ● IL. 60131
Ph: 1-800-9-VALVE-9 or 1-847-671-4300 ● Fax: 1-800-447-8329 or 1-847-671-4380 ● http://www.sloan.com

▶ Sensor Range

Nominal: 4" - 5" (102 mm - 127 mm)

Faucet Adaptive Self-Adjustment Range: 1"-6" (25 mm-150 mm)

▶ Time Out Setting

30 seconds — Maximum time faucet will run upon continuous detection

▶ Can combine up to six (6) faucets on one voltage adapter

▶ Electrical Connection for up to Six (6) Faucets Using One (1) Voltage Adapter

NOTE: PLUMBING CONNECTIONS NOT SUPPLIED

NOTE: INSTALL IN ACCORDANCE WITH LOCAL PLUMBING CODES

▶ Power Supplies

6 VDC Solar Energy Module with 50/60 Hz, 6 VDC Lithium Battery Pack

120 VAC/6.75 VDC Voltage Adapter (Option) Batteries Act as Backup Shown with EFX-800.000.1000

▶ OPERATION

1. A continuous, invisible light beam is emitted from the sensor located at the front of the hand washing faucet.
2. As the user's hands enter the beam's effective range, the beam is reflected back into the sensor receiver and activates the solenoid valve allowing water to flow from the faucet. Water will flow until the hands are no longer sensed or until the faucet reaches its automatic time out limit setting.
3. When hands are moved away from the sensor, the loss of reflected light initiates an electrical signal that closes the solenoid valve shutting off the water flow. The circuit then automatically resets and is ready for the next user.

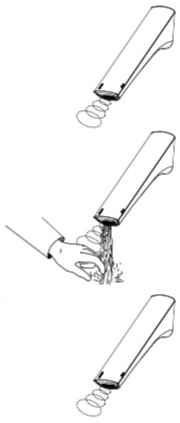

▶ Accessories (ordered separately)

Splitter (included in hardwire less adapter)

126" Extension Cable

11 13/16" Extension Cable

47 1/4" Extension Cable

▶ ROUGH-IN

EFX-800.X0X.10X0 Faucet with Vessel Sink

Electrical Connection for up to Six (6) Faucets Using One (1) Voltage Adapter

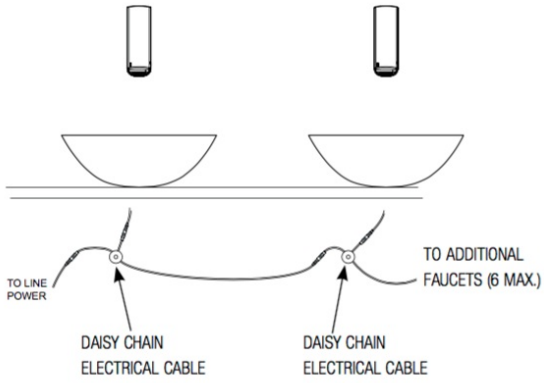

NOTE: PLUMBING CONNECTIONS NOT SUPPLIED
NOTE: INSTALL IN ACCORDANCE WITH LOCAL PLUMBING CODES

ROUGH-IN DIAGRAM
EFX-800.X0X.10X0
Faucet with Vessel Sink

