Sloan® Model OPTIMA® Plus Battery Powered Flushometers Sloan Optima Plus RESS-XDT-U

► Code Number

3379041

► SPECIFICATIONS

Description

- Battery Powered, Sensor Activated, Sloan® Optima® Plus Model Retrofit Conversion Kit for Exposed Urinal Flushometers that incorporates a Valve Body with a Tailpiece Connection for Cambridge Brass Teck Valve Control Stop.

Flush Cycle

- 0.5 gpf/1.9 Lpf
- 3.5 gpf/13.2 lpf
- 1.0 gpf/3.8 Lpf
- 1.5 gpf / 5.7 Lpf

Specifications

- Exposed parts Polished Brass
- Low Consumption flush accuracy
- Initial Set-up Range Indicator Light (first 10 minutes)
- "Low Battery" Flashing LED
- Installation Tools provided
- No External Volume Adjustment to Ensure Water Conservation
- Infrared Sensor with Multiple-focused, Lobular Sensing Fields for high and low target detection
- Latching Solenoid Operator
- Infrared Sensor Range Adjustment Screw
- Chrome Plated Metal Handle Cap
- Engineered Plastic Cover with replaceable Lens Window
- Quiet, Exposed, OPTIMA Plus®, Battery Powered, Sensor Activated Urinal Flushometer Retrofit Conversion Kit with Cambridge Brass Teck Valve Tailpiece Connection with the following features:
- ADA Compliant Battery Powered Infrared Sensor for automatic "Hands-free" operation
- Courtesy Flush® Override Button
- Valve Body, Cover, Tailpiece and Control Stop shall be in conformance with ASTM Alloy Classification for Semi-Red Brass. Valve shall be in compliance with the applicable sections of ASSE 1037 and ANSI/ASME 112.19.2.
- High Chloramine Resistant PERMEX® Synthetic Rubber Diaphragm with Linear Filtered Bypass and Vortex Cleansing Action™
- Four (4) Size AA Batteries included

Accessories (Sold Separately)

- See Accessories Section and OPTIMA® Accessories Section of the Sloan catalog for details on these and other OPTIMA® Flushometer variations.

► ELECTRICAL SPECIFICATIONS

Control Circuit

- Solid State
- 6 VDC Input
- 8 Second Arming Delay
- 24 Hour Sentinel Flush

Sensor Type

- Active Infrared

► FEATURES

Automatic Operation

- Sloan Optima Plus® Flushometers activate via multi-lobular sensor detection to provide the ultimate in sanitary protection and automatic operation. A battery powered infrared sensor sets the flushing mechanism after the user is detected and Completes the flush when the user steps away.

Economical

- Automatic operation provides water usage savings over other flushing devices. Reduces maintenance and operation costs.

Hygienic

- User makes no physical contact with the Flushometer surface except to initiate the Override Button when required. Helps control the spread of infectious diseases.

► Compliance & Certifications

LISTED 376U

This space for Architect/Engineer Approval

► ROUGH-IN

SLOAN 10500 SEYMOUR AVE. ● FRANKLIN PARK, ● IL. 60131
Ph: 1-800-9-VALVE-9 or 1-847-671-4300 ● Fax: 1-800-447-8329 or 1-847-671-4380 ● http://www.sloan.com

Sensor Range
- Nominal 15"-30" (381 mm-762 mm), adjustable ± 8" (203 mm)

Indicator Lights
- Range Adjustment

Battery Type
- (4) AA Alkaline

Battery Life
- 6 Years @ 4,000 flushes/month

Sentinel Flush
- Automatic flush once every 72 hours after the last flush. Product shipped from factory with feature turned off. Consult factory to activate.

Operating Pressure
- 15 - 100 psi (104 - 689 kPa)

▶ OPERATION

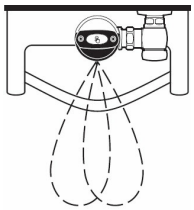

1. A continuous, invisible light beam is emitted from the Sensor.

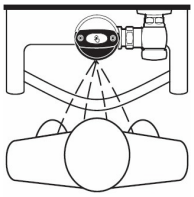

2. As the user enters the beam's effective range (15" to 30") the beam is reflected into the Scanner Window and transformed into a low voltage electrical circuit. Once activated, the Output Circuit continues in a "hold" mode for as long as the user remains within the effective range of the Sensor.

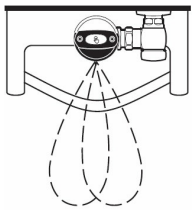

3. When the user steps away from the Sensor, the Sensor initiates an electrical signal that operates the Solenoid. This initiates the flushing cycle to flush the fixture. The Circuit then automatically resets and is ready for the next user.

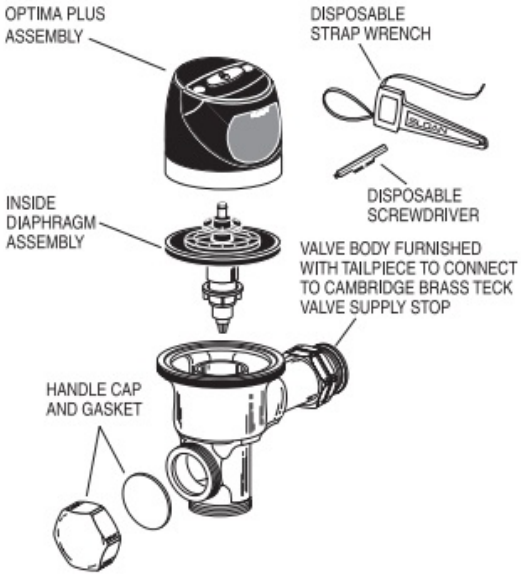

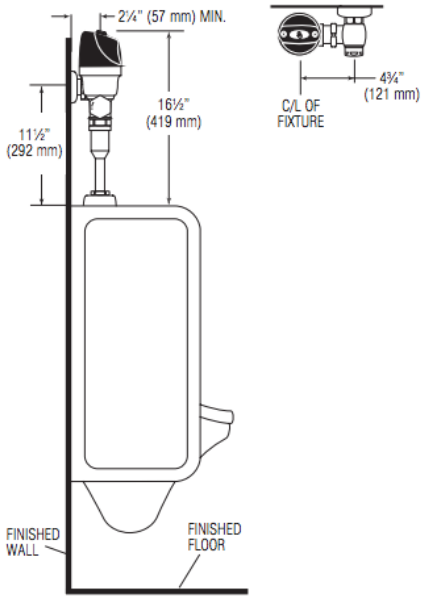

Note: Lens Deflector no longer needed for targeting children or wheel chair users.